Controllo Nonlineare e Sistemi Meccatronici

Luca Zaccarian

Dipartimento di Ingegneria Industriale
University of Trento

Industrio Talk+ Nuove Tecnologie per L'Automazione
September 30, 2021

"Automazione" raccontata da studenti magistrali

- Alcuni stralci da un video vincitore di una international contest nel 2014
https://youtu.be/XJLMW6I303g

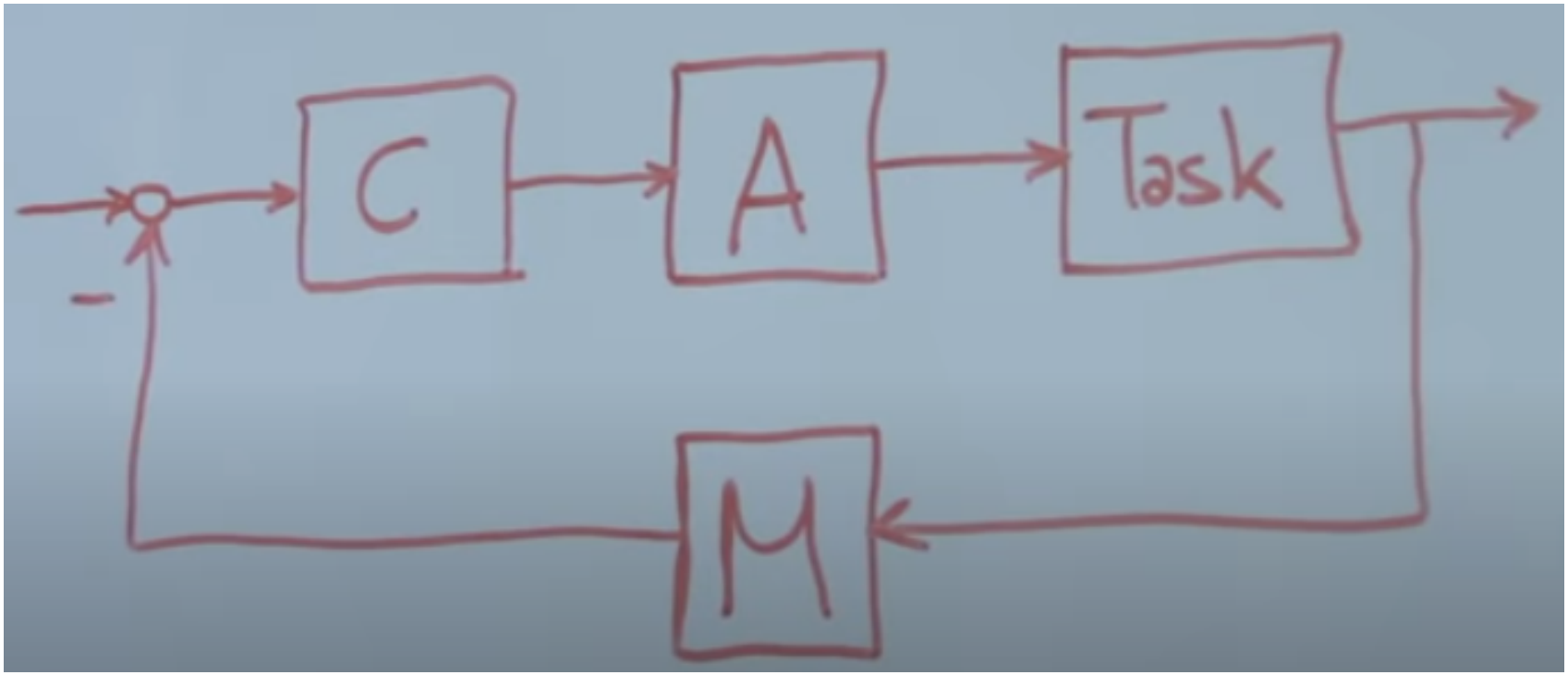

- **Task**: Processo Industriale o Impianto (Plant)
- **A**: Attuatore (valvola, motore, pompa, elettromagnete, ...)
- **M**: Sensore che fornisce Misura (encoder, cella di carico, radar, ...)
- **C**: Controllore o algoritmo o legge di controllo (Matematica)

Il punto di vista di Luca Zaccarian

Un paio di esperienze Internazionali

Active control provides extreme vibration isolation

Newport Corporation's Elite 3™ vibration isolation table

- Useful, for example, in
  - high-precision microscopy
  - semiconductor manufacturing
- Actuators: piezoelectric stack
- Sensors: geophones

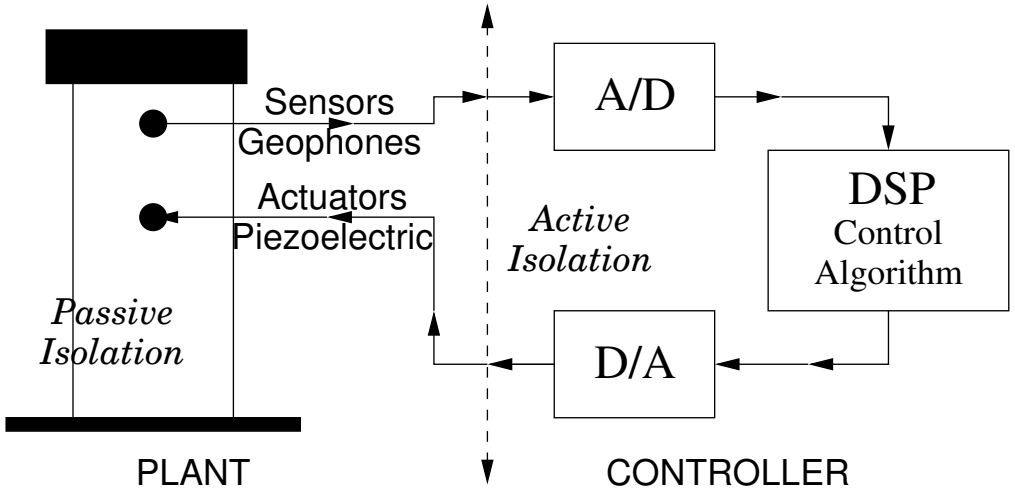

Input saturation confuses the base control algorithm

- Extreme vibration suppression (40 dB) up to $t = 23\ s$

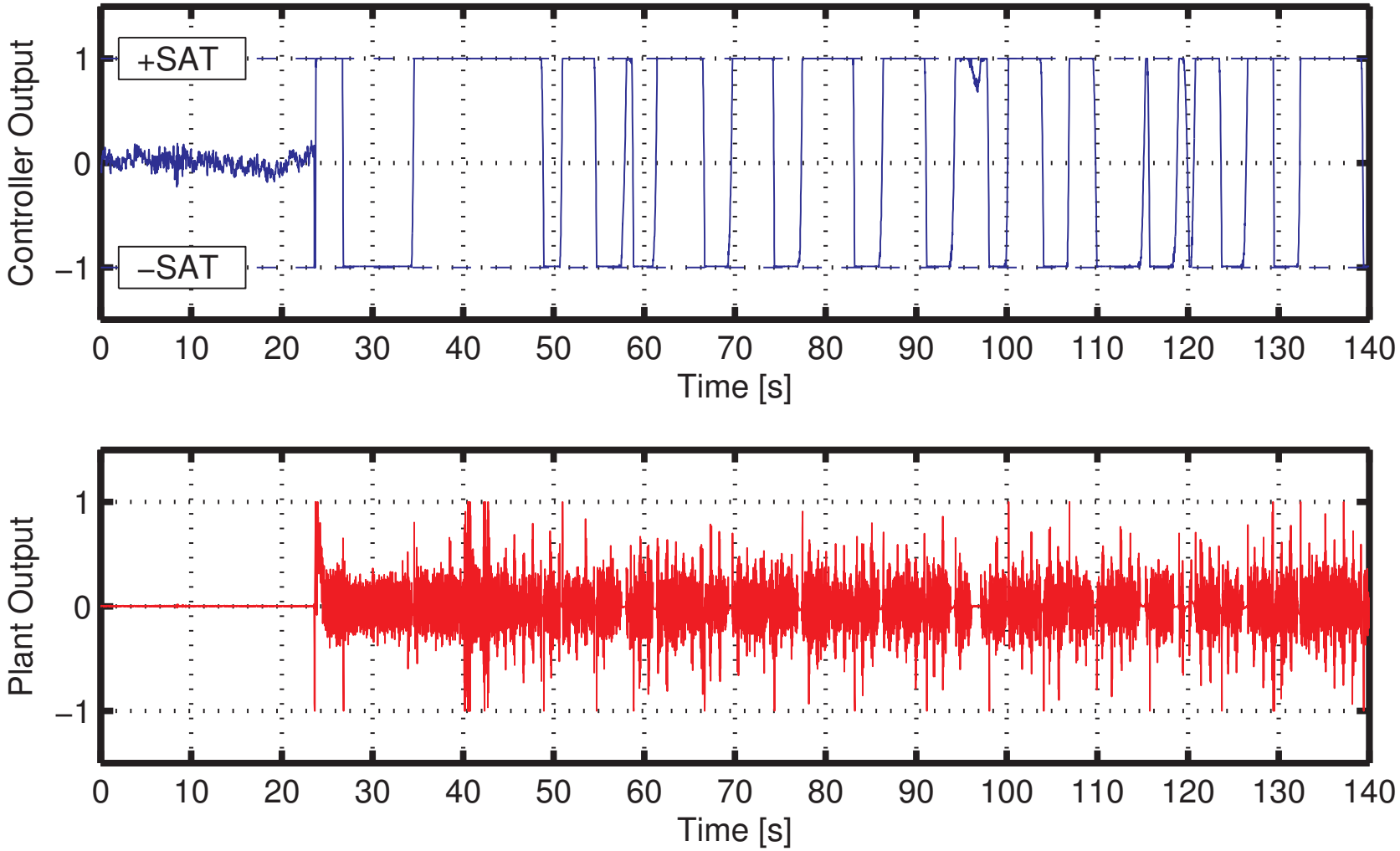

- At $t = 23\ s$ someone walks close to the table

Linear Model Recovery Anti-Windup main intuition

Teel and Kapoor [1997], Zaccarian and Teel [2002, 2011]

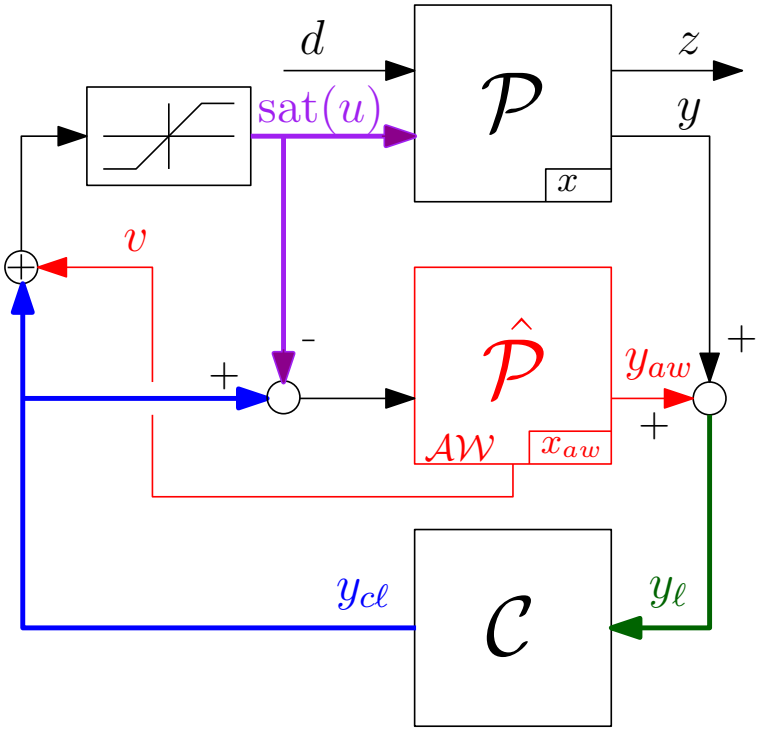

Model Recovery Anti-Windup *(MRAW)*

- Framework for **nonlinear** $\mathcal{AW}$:
  - $\mathcal{AW}$ is a model $\hat{\mathcal{P}}$ of $\mathcal{P}$
  - $v = k(x_{aw})$ is a (nonlinear) stabilizer whose construction depends on $\mathcal{P}$
- $\mathcal{AW}$ is **controller-independent**:
  - any (nonlinear) $\mathcal{C}$ allowed
- Useful feature of MRAW:
  - $\mathcal{C}$ "receives" linear plant output y_ℓ
  - $\Rightarrow \mathcal{C}$ "delivers" linear plant input $y_{c\ell}$

- Plant $\mathcal{P}$

$$\begin{cases} \dot{x} &= A\,x + B_d\,d + B_u\,\mathrm{sat}(u) \\ z &= C_z\,x + D_{dz}\,d + D_{uz}\,\mathrm{sat}(u) \\ y &= C_y\,x + D_{dy}\,d + D_{uy}\,\mathrm{sat}(u) \end{cases}$$

- Anti-windup filter $\hat{\mathcal{P}}$

$$\begin{cases} \dot{x}_{aw} &= A\,x_{aw} + B_u\,(y_c - \mathrm{sat}(u)) \\ y_{aw} &= C_y\,x_{aw} + D_{uy}\,(y_c - \mathrm{sat}(u)) \end{cases}$$

- Unconstrained dynamics $\mathcal{P} + \hat{\mathcal{P}}$:

$$\begin{cases} \dot{x}_\ell &= A\,x_\ell + B_d\,d + B_u\,y_c \\ \overset{=y+y_{aw}}{y_\ell} &= C_y\,x_\ell + D_{dy}\,d + D_{uy}\,y_c \end{cases}$$

MRAW dramatically reduces isolation recovery time

Teel et al. [2006], Zaccarian et al. [2000]

- Effect of a footstep at the side of the table (recovery $\approx$ 4 s)

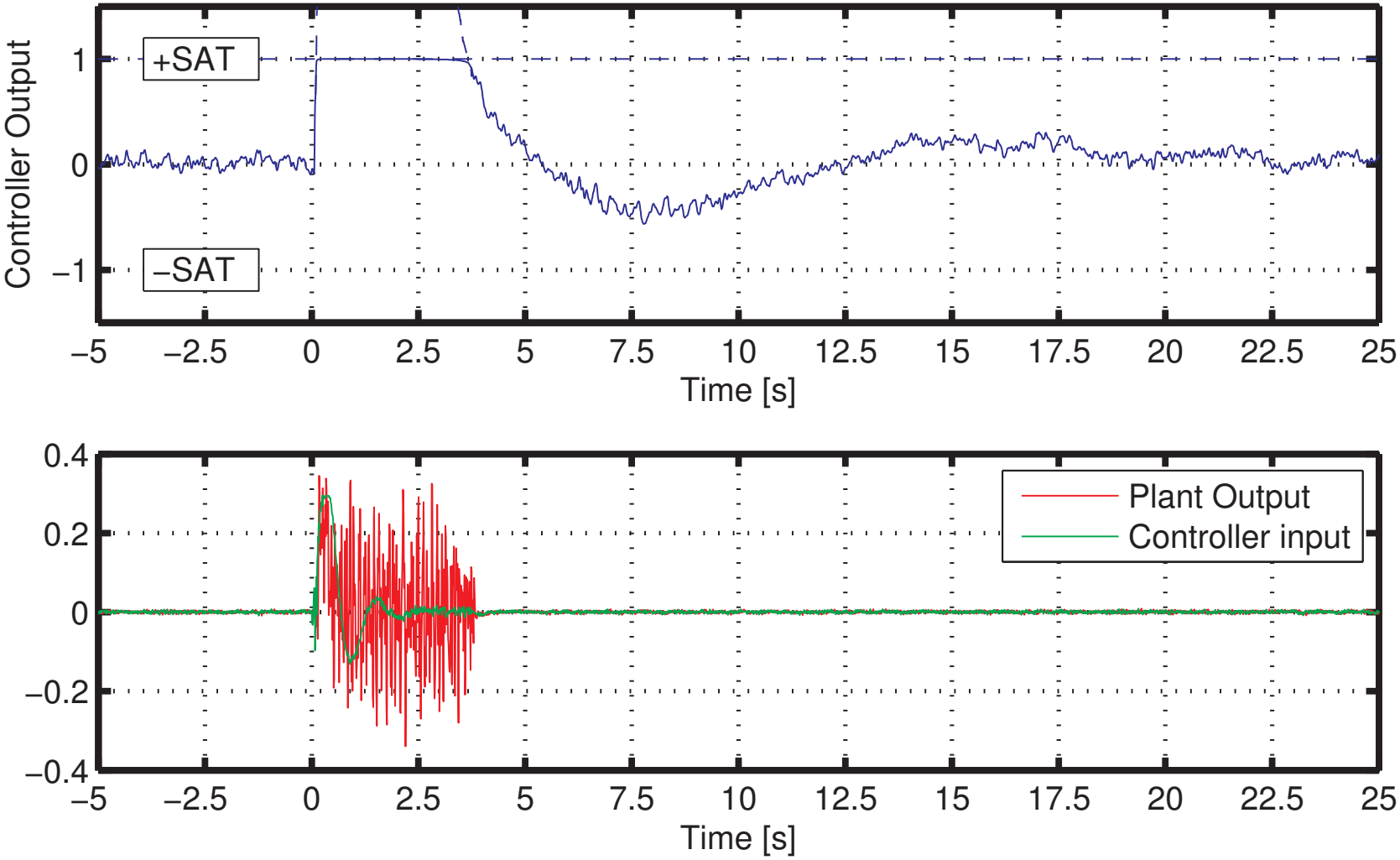

Even a bat strike does not confuse the MRAW controller

Teel et al. [2006], Zaccarian et al. [2000]

- Hitting with a baseball bat the table leg (recovery $\approx$ 5 s)

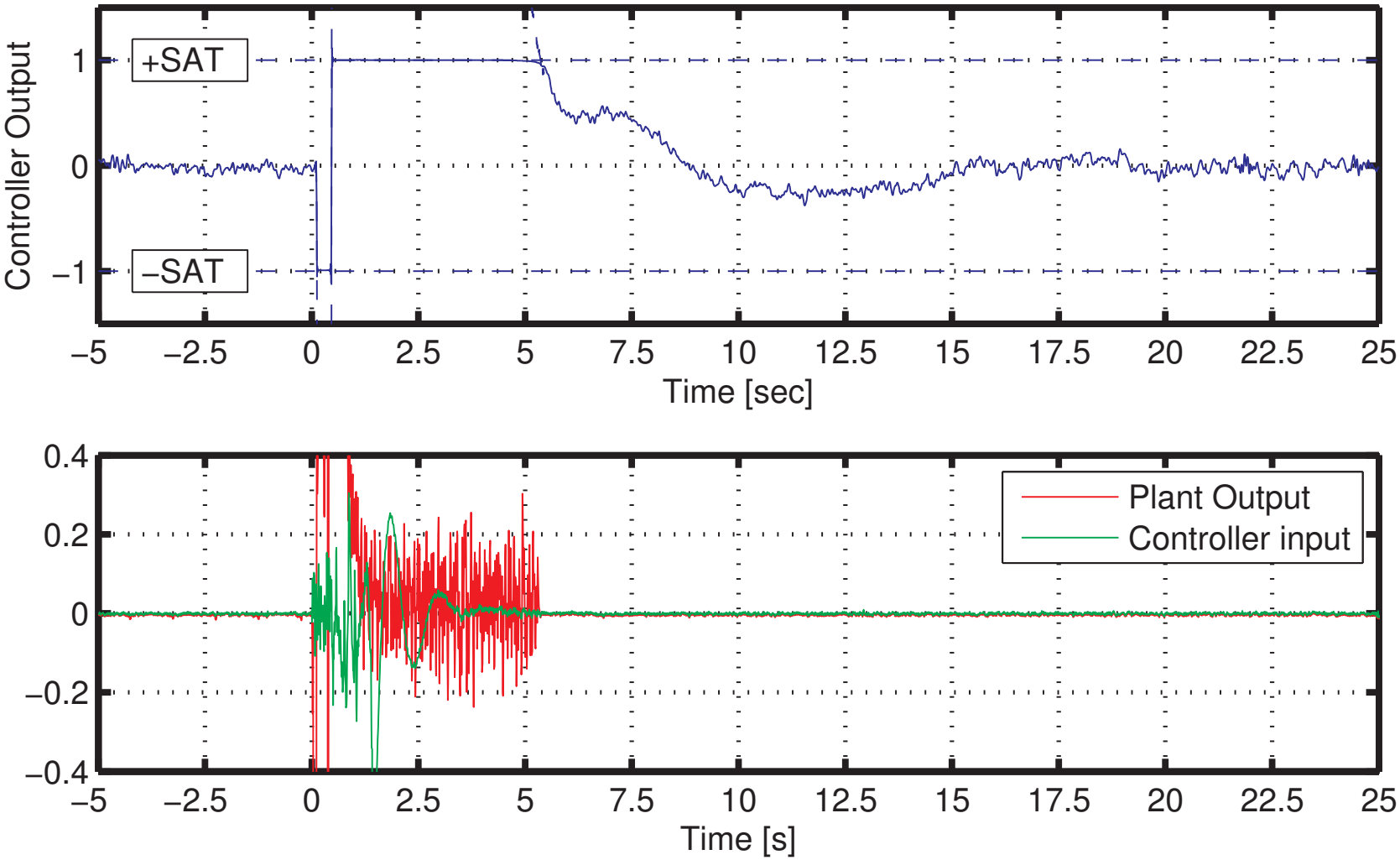

Bumpless transfer enables smooth controller activation

Teel et al. [2006], Zaccarian et al. [2000]

- Controller is gradually activated in bumpless transfer scheme

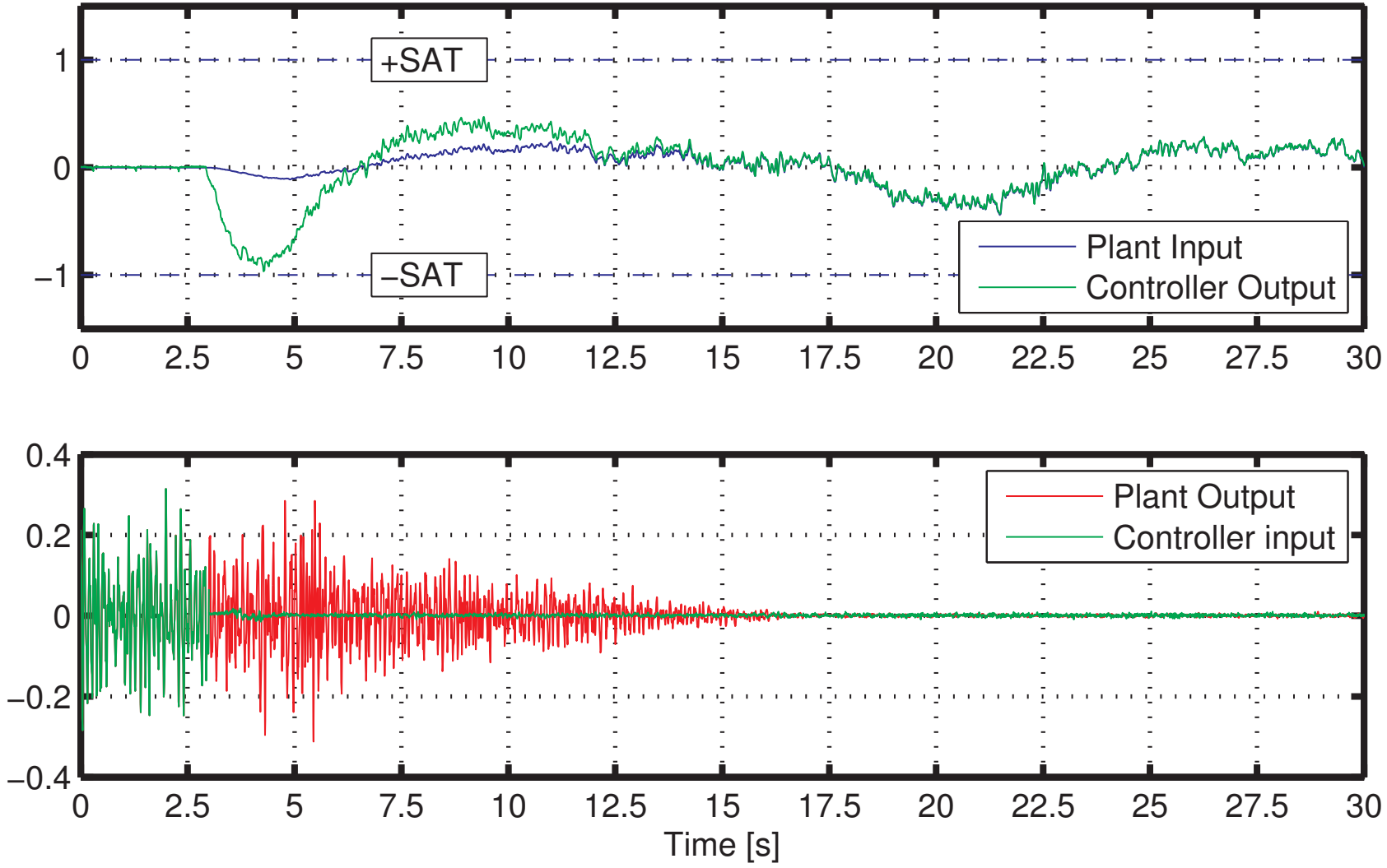

Anti-windup for open-water irrigation channels

Zaccarian et al. [2007]

- Open Water Channels: rivers are broken into pools for water saving
- Gate saturation problems:
  - bumpless transfer from manual control to avoid startup transients
  - with small flows in the pools bad lower saturation effects
  - with large disturbances (rain, etc) with overflow to downstream pool
- **Challenge**: plant is not exponentially stable (poles in 0)

Simulations save days of transient response

Zaccarian et al. [2007]

Simulations with model of Haughton Main Channel (Queensland, Aus)

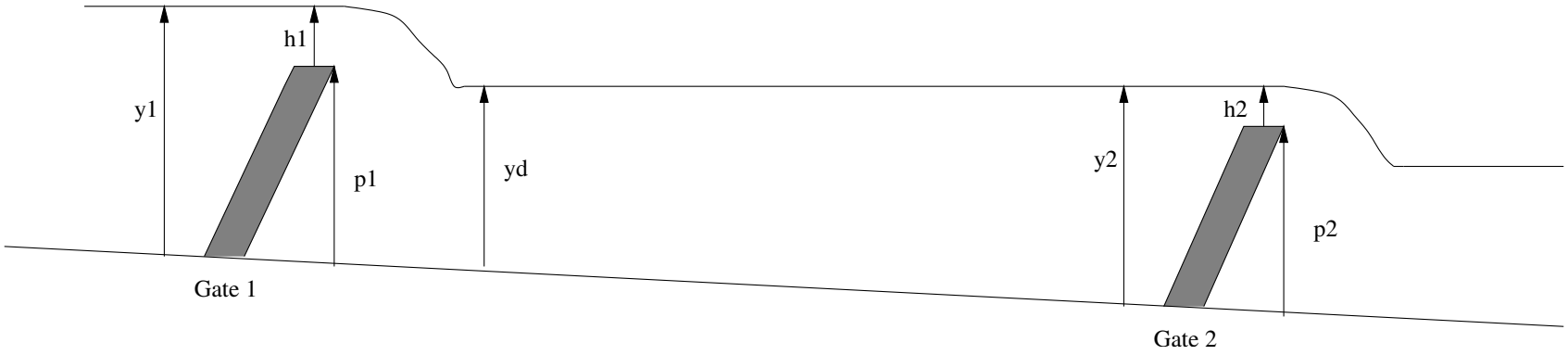

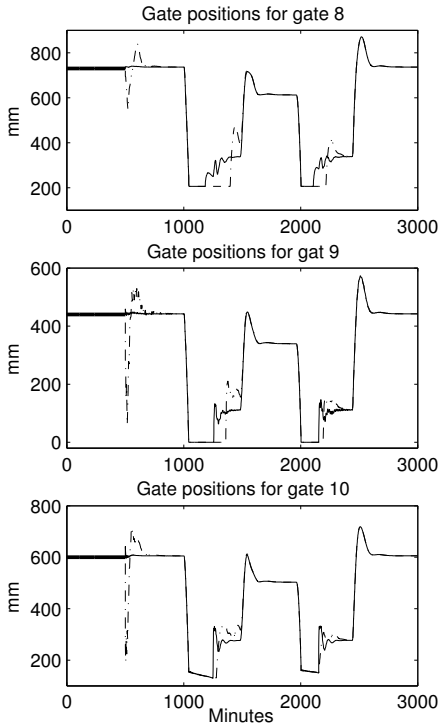

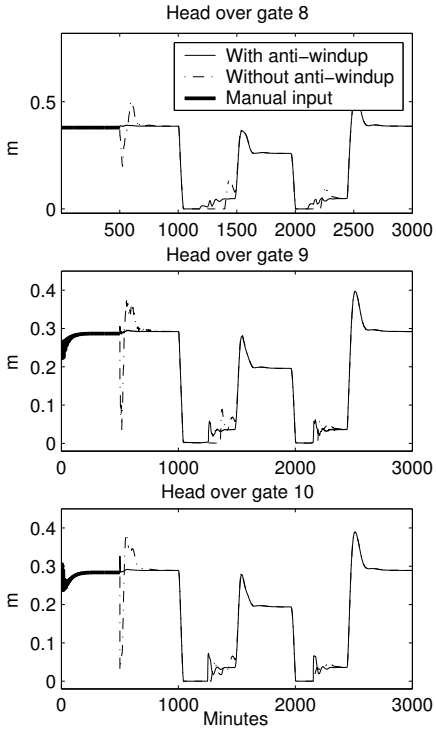

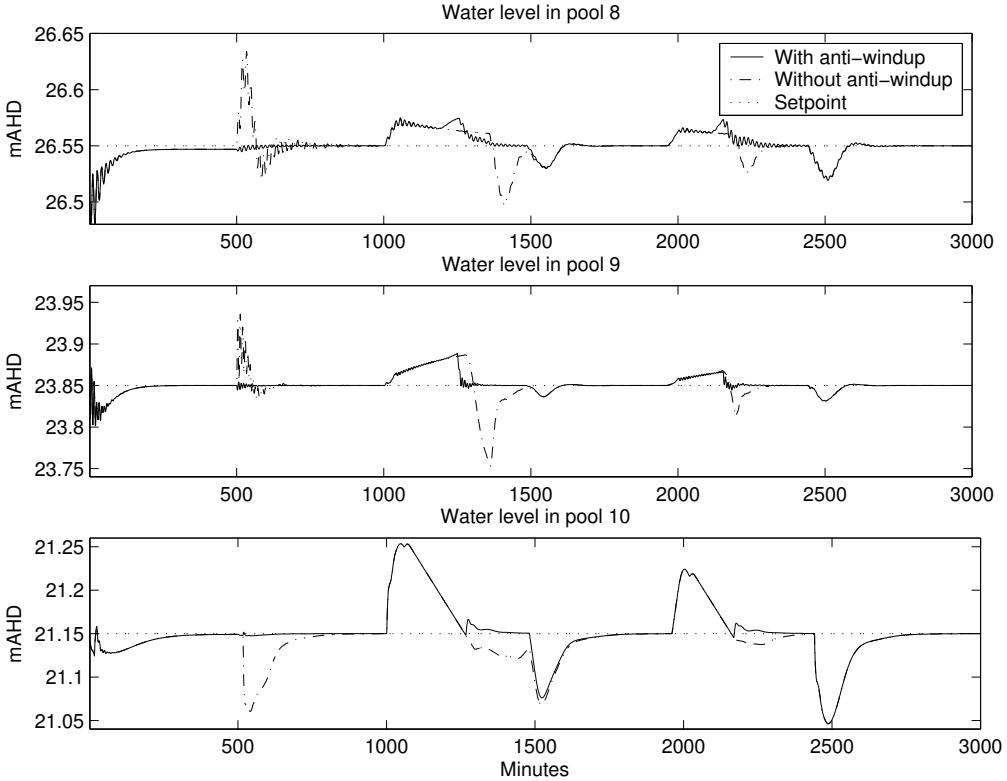

Il punto di vista di Luca Zaccarian

Un paio di esperienze Locali

Controllo di Wet Clutches presso DRTS, Arco

Cocetti et al. [2020], De Pascali et al. [2016], Cordioli et al. [2015]

- Power-split Transmission needs Wet Clutches Actuation Scheme

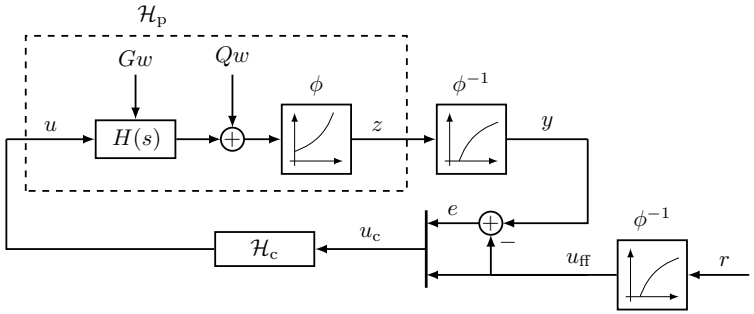

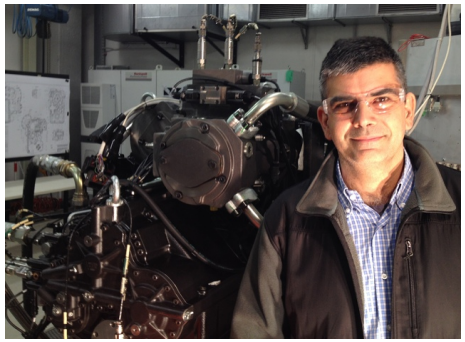

- Convenient Tuning using Linear Matrix Inequalities

$$\max_{W,X,\alpha} \alpha \quad \text{subject to:}$$

$$W = W^\top \geq I \tag{19a}$$

$$M + M^\top \leq -2\alpha W \tag{19b}$$

$$\begin{bmatrix} (M+M^\top)\sin\theta & (M-M^\top)\cos\theta \\ (M^\top - M)\cos\theta & (M+M^\top)\sin\theta \end{bmatrix} \leq 0 \tag{19c}$$

$$\begin{bmatrix} W & X^\top \\ X & I \end{bmatrix} \geq 0 \tag{19d}$$

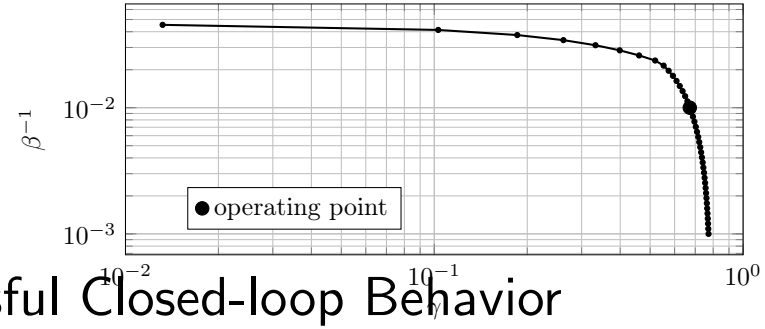

- Experimental Results Show Successful Closed-loop Behavior

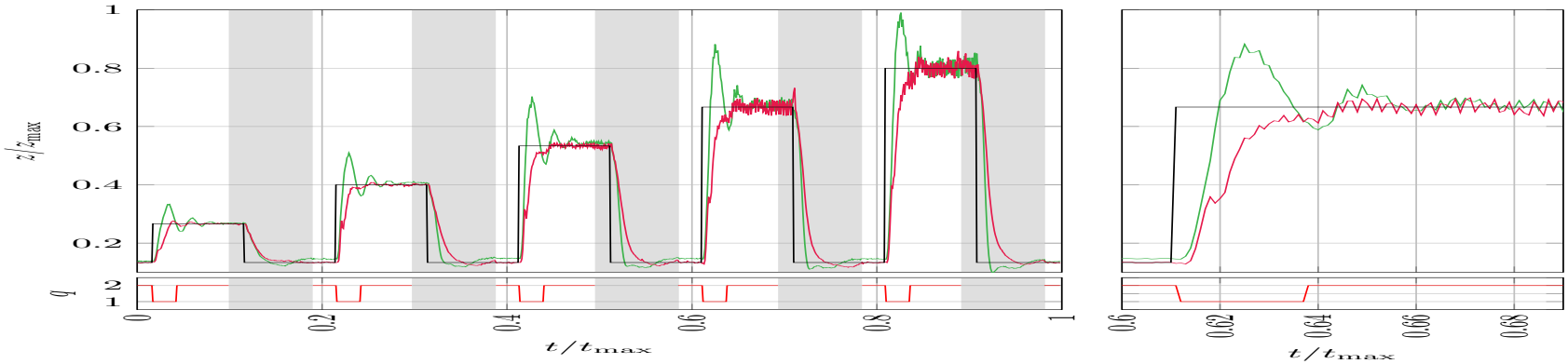

Controllo di Automazioni di Accessi presso BFT, Schio (VI)

Cunico et al. [2021]

- Fast Barrier and Gates Opening Without Oscillations

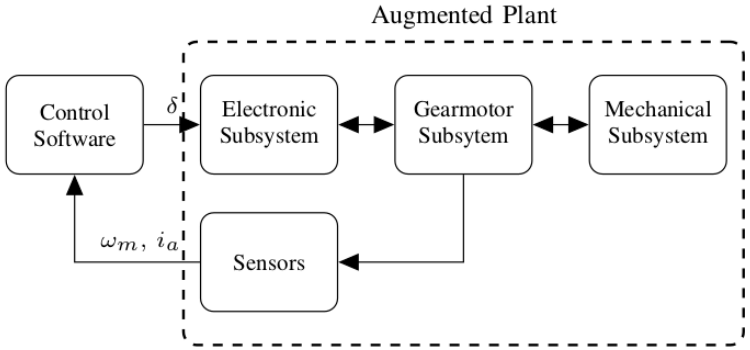

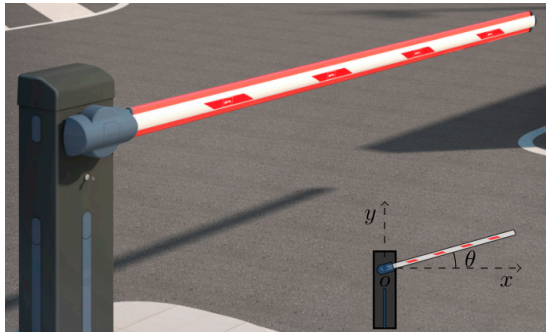

- Cheap Electronics and Hardware Provides Nonlinear/Uncertain Response

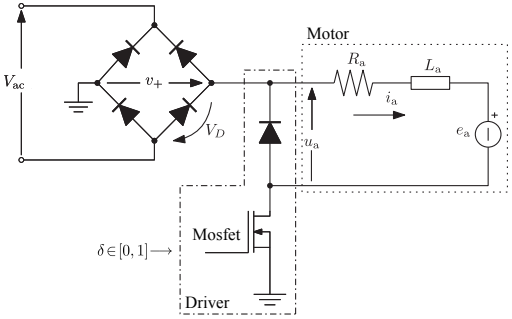

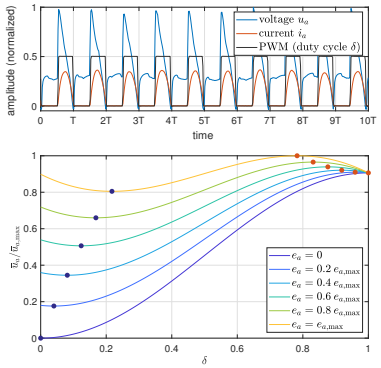

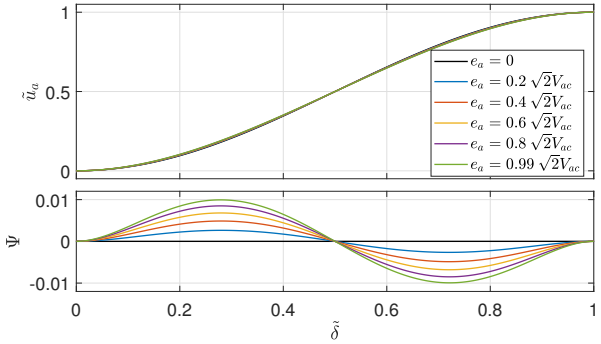

- Experimental Results Show Successful Closed-loop Behavior

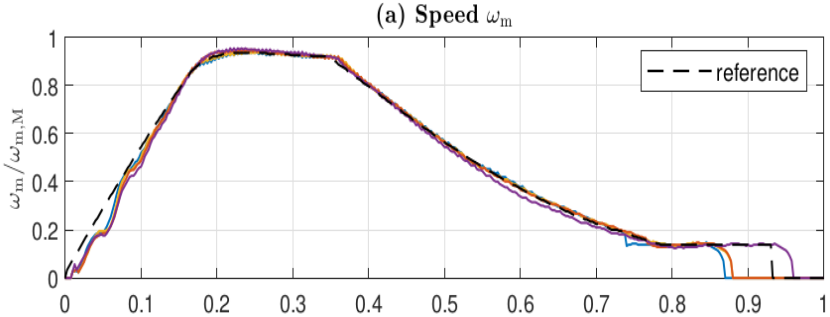

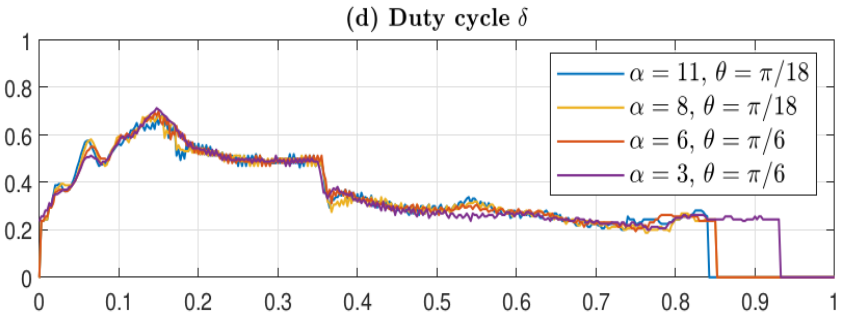

Bibliography I

M. Cocetti, S. Donnarumma, L. De Pascali, M. Ragni, F. Biral, F. Panizzolo, P.P. Rinaldi, A. Sassaro, and L. Zaccarian. Hybrid non-overshooting set-point pressure regulation for a wet clutch. *IEEE/ASME Transactions on Mechatronics*, 25(3):1276–1287, 2020.

M. Cordioli, M. Mueller, F. Panizzolo, F. Biral, and L. Zaccarian. An adaptive reset control scheme for valve current tracking in a power-split transmission system. In *European Control Conference*, pages 1878–1883, Linz, Austria, July 2015.

D. Cunico, A. Cenedese, L. Zaccarian, and M. Borgo. Nonlinear modeling and feedback control of boom barrier automation. *Submitted to the IEEE/ASME Transactions on Mechatronics*, 2021.

L. De Pascali, M. Cocetti, F. Biral, A. Palazzetti, F. Panizzolo, P.P. Rinaldi, A. Sassaro, and L. Zaccarian. LMI-based non-overshooting pressure control design for a wet clutch. In *IEEE Multiconference on Systems and Control*, pages 329–334, Buenos Aires, Argentina, September 2016.

A.R. Teel and N. Kapoor. The $\mathcal{L}_2$ anti-windup problem: Its definition and solution. In *European Control Conference*, Brussels, Belgium, July 1997.

Bibliography II

A.R. Teel, L. Zaccarian, and J. Marcinkowski. An anti-windup strategy for active vibration isolation systems. *Control Engineering Practice*, 14(1): 17–27, 2006.

L. Zaccarian and A.R. Teel. A common framework for anti-windup, bumpless transfer and reliable designs. *Automatica*, 38(10):1735–1744, 2002.

L. Zaccarian and A.R. Teel. *Modern anti-windup synthesis: control augmentation for actuator saturation*. Princeton University Press, Princeton (NJ), 2011.

L. Zaccarian, A.R. Teel, and J. Marcinkowski. Anti-windup for an active vibration isolation device: theory and experiments. In *Proceedings of the American Control Conference*, pages 3585–3589, Chicago (IL), USA, June 2000.

L. Zaccarian, E. Weyer, A.R. Teel, Y. Li, and M. Cantoni. Anti-windup for marginally stable plants and its application to open water channel control systems. *Control Engineering Practice*, 15(2):261–272, 2007.