LMI-based linear anti-windup design for asymptotically stable linear plants: an overview of recent results

Luca Zaccarian

(with Andrew R. Teel and Gene Grimm - UCSB)

University of Rome, Tor Vergata

Seminar at University of Melbourne, July 2003

Outline

- ▷ Introduction `(5 slides)`
  - Saturation, windup and anti-windup
  - Motivating example
  - Historical overview
- ▷ Linear anti-windup problem characterization `(9 slides)`
  - Linear anti-windup structure
  - Linear anti-windup performance goals
  - Lyapunov based design goals
- ▷ Feasibility of linear anti-windup and interpretations `(16 slides)`
  - Feasibility of stabilizing linear anti-windup
  - Feasibility of stabilizing linear anti-windup with guaranteed performance
- ▷ Anti-windup synthesis `(3 slides)`
  - Linear matrix inequality (LMI) procedures
- ▷ Examples `(12 slides)`
- ▷ Conclusions `(total = 5+9+16+3+12 =` **45** `slides)`

Linear design and input saturation

▷ Many plants are well modeled locally as linear:

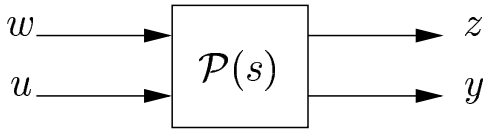

$$\mathcal{P}\left\{\begin{array}{rcl} \dot{x}_p & = & A_p\,x_p + B_{p,w}\,w + B_{p,u}\,u \\ z & = & C_{p,z}\,x_p + D_{p,zw}\,w + D_{p,zu}\,u \\ y & = & C_{p,y}\,x_p + D_{p,yw}\,w + D_{p,yu}\,u \end{array}\right.$$

▷ For linear plant, many excellent methods exist to construct linear controller:

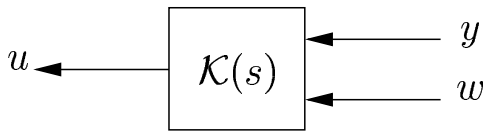

$$\mathcal{K}\left\{\begin{array}{rcl} \dot{x}_k & = & A_k\,x_k + B_{k,w}\,w + B_{k,y}\,y \\ u & = & C_k\,x_k + D_{k,w}\,w + D_{k,y}\,y \end{array}\right.$$

▷ However, the primary deviation from linear model is often input saturation (on each of the inputs):

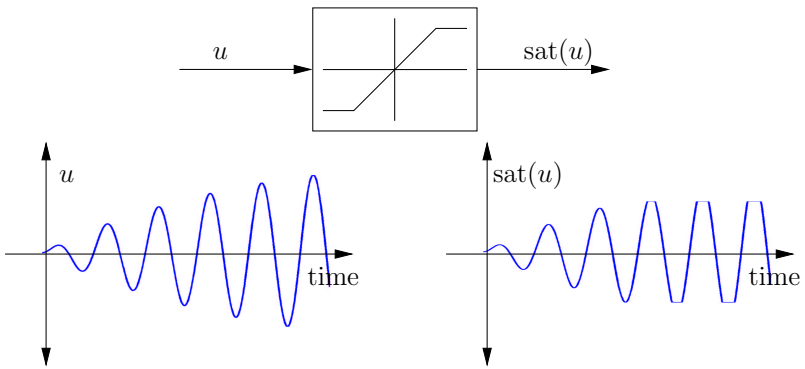

Windup and Anti-windup

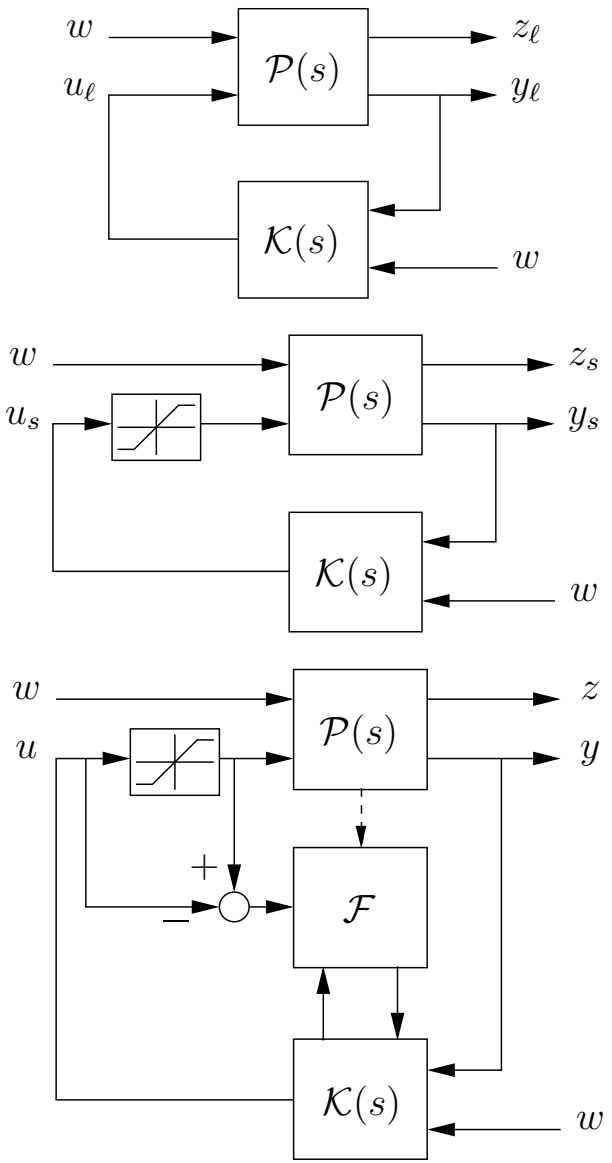

Given: Unconstrained closed-loop

- desirable performance (for all signals)

Given: Saturated closed-loop

- desirable performance for small signals
- "windup" effect for large signals:
  - stability or performance loss

Goal: Design "anti-windup" closed-loop

- stability recovery
- When comparing unconstrained c.l. to anti-windup c.l.:
  - small signal preservation (never saturation $\Rightarrow$ never deviation)
  - tracking (finite duration of u_ℓ in saturation $\Rightarrow$ convergence)

Longitudinal F8 dynamics: unconstrained

▷ Eighth-order unconstrained controller induces highly desirable response

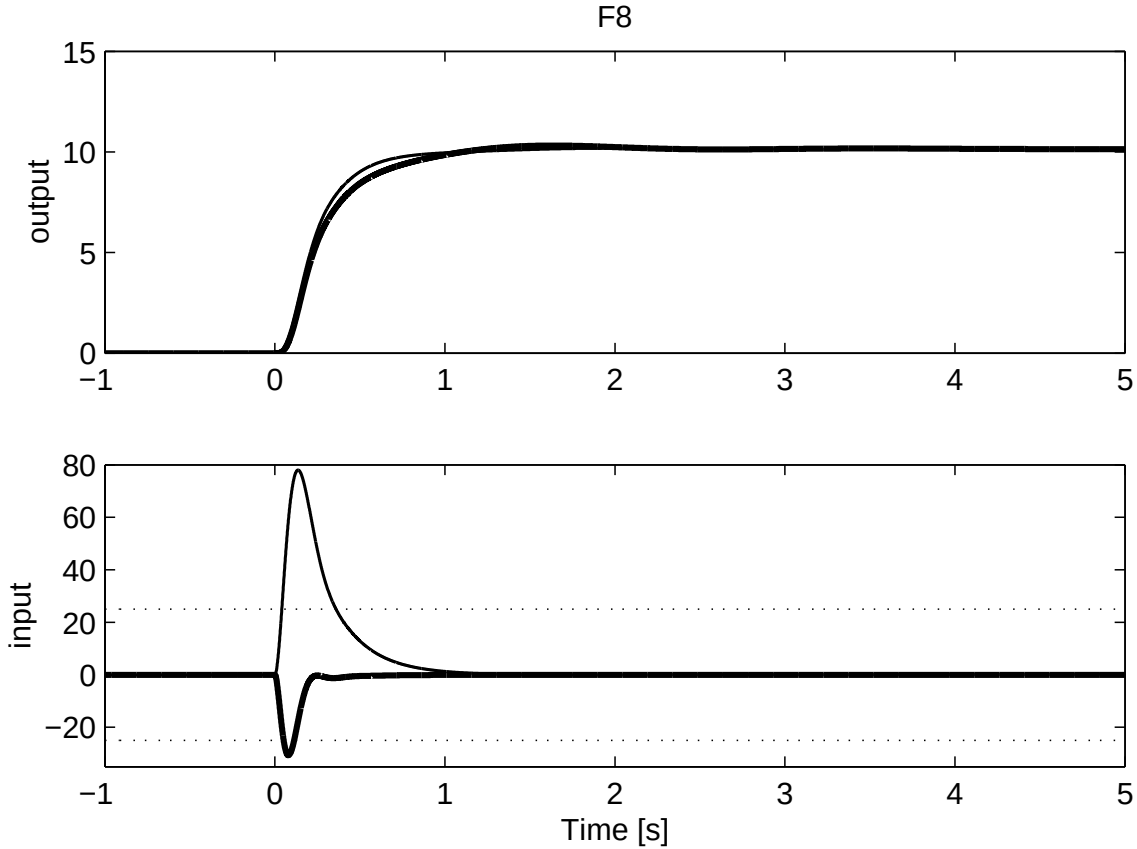

Output: pitch angle (thick) and flight path angle (thin)

Input: elevator angle (thick) and flaperon angle (thin)

Longitudinal F8 dynamics: saturated

▷ Saturation of both inputs at $\pm 25deg$ causes severe performance loss

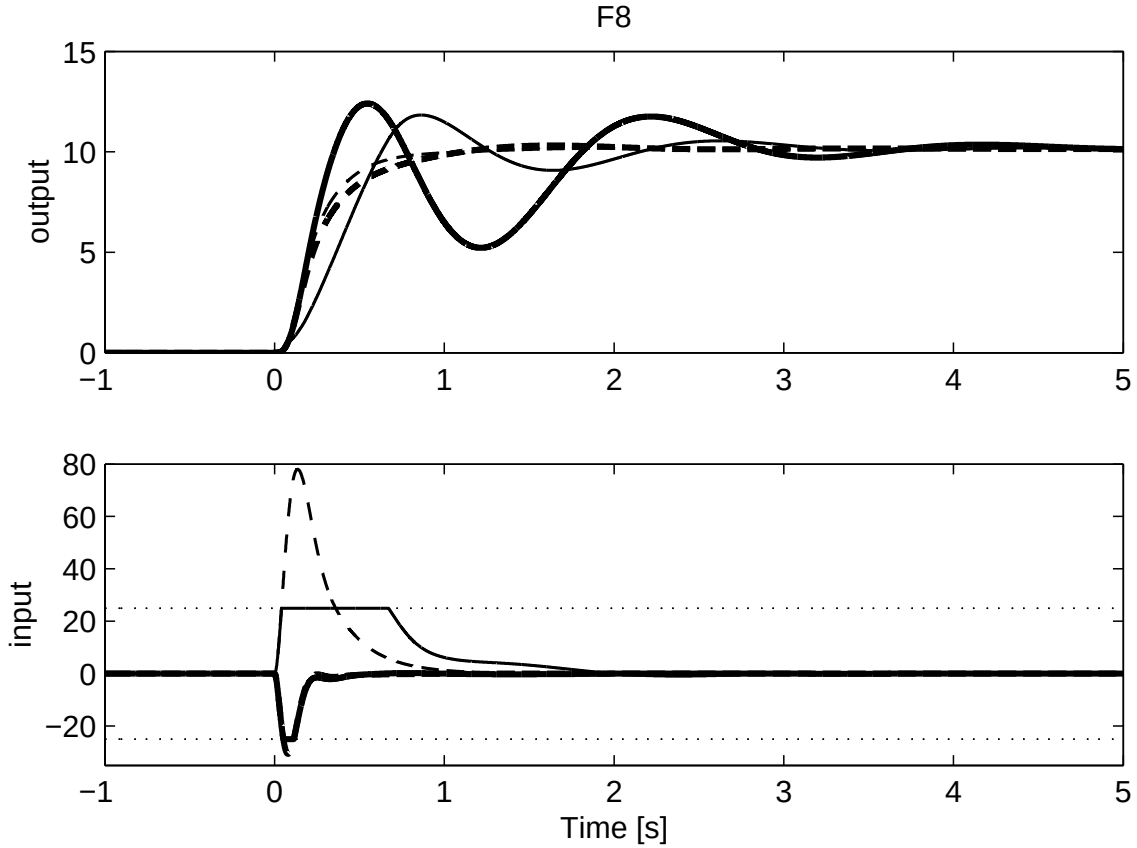

Output: pitch angle (thick) and flight path angle (thin)

Input: elevator angle (thick) and flaperon angle (thin)

A historical overview

- mid 1950's - mid 1970's — **Ad hoc** designs for PI and PID controllers (*e.g.*, integrator limiting, back-calculation for PID, integrator reinitialization, intelligent integrator for PI).

- mid 1970's - 1987 — Designs for **more general** controllers (*e.g.*, conditioning techniques, observer approach, IMC).

- 1987 - 1995 — **Inadequate** stability or performance of early schemes demonstrated, followed by unification of most existing schemes.

- 1995 - 2000 — Systematic designs for general controllers with **stability guarantee** (*e.g.*, reference governors [unclear utility for disturbances], $\mathcal{H}_\infty$ designs [some with unclear performance objective], BMI [nonconvex] methods.

- 2000 - present — Constructive design for **high-performance** anti-windup. LMI methods for static and dynamic anti-windup. Nonlinear anti-windup for linear and nonlinear plants.

Linear anti-windup problem *characterization*

Linear anti-windup design

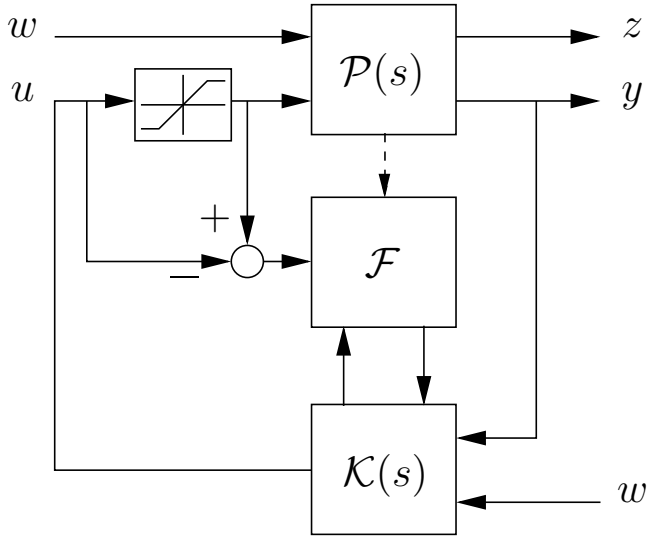

Given:

▷ Continuous-time finite-dimensional LTI plant $\mathcal{P}$

▷ Continuous-time finite-dimensional LTI unconstrained controller $\mathcal{C}$

▷ Saturation function

Problem:

▷ Design the linear block $\mathcal{F}$ s.t. the anti-windup closed-loop

- is well-posed
- is internally stable
- guarantees some (perhaps large) finite performance gain γ

Enhanced problems:

▷ Given γ, design such $\mathcal{F}$ s.t. properties hold with the finite gain γ

▷ Find the minimum γ s.t. previous enhanced problem admits a solution

Well-posedness

Definition: An interconnection is said to be *well-posed* if all signals are well-defined by the exogenous inputs and by the state.

Example:

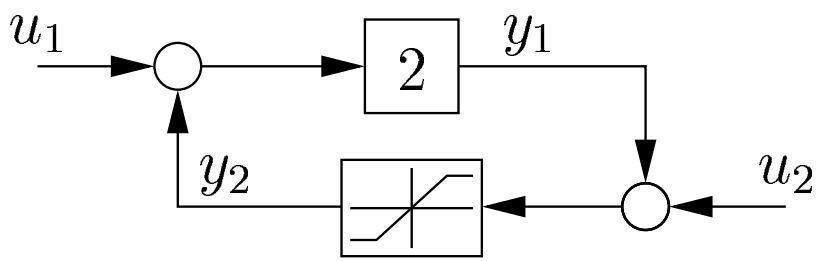

Solutions when $(u_1,\, u_2) = (0,\, 0)$ are

$$(y_1,\, y_2) \in \{(0,\, 0),\, (2,\, 1),\, (-2,\, -1)\}$$

$\Rightarrow$ The interconnection is not well-posed (it locally is!)

Classifying anti-windup structure

Internal structure of $\mathcal{F}$:

▷ Linear or nonlinear?

▷ Static or dynamic?

(If dynamic, what order?)

External structure of $\mathcal{F}$:

▷ What is measured by $\mathcal{F}$?

▷ What is modified by $\mathcal{F}$?

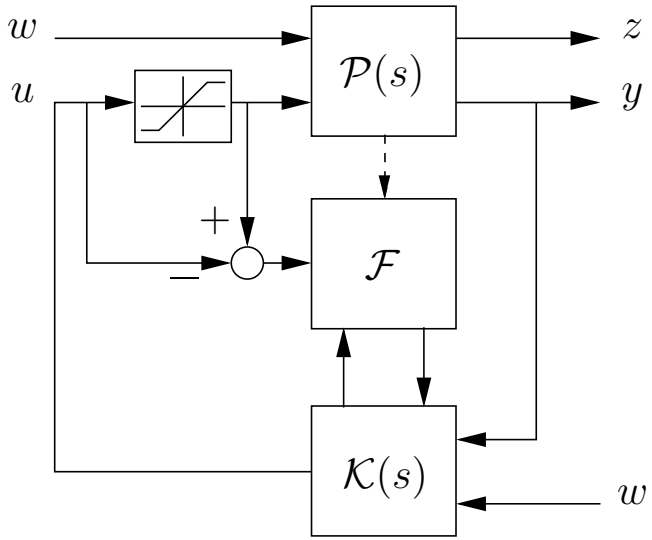

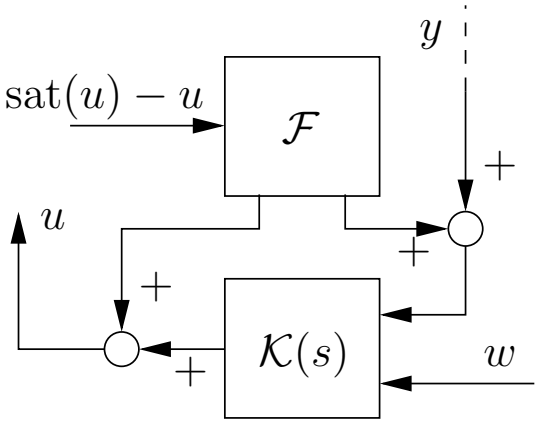

External

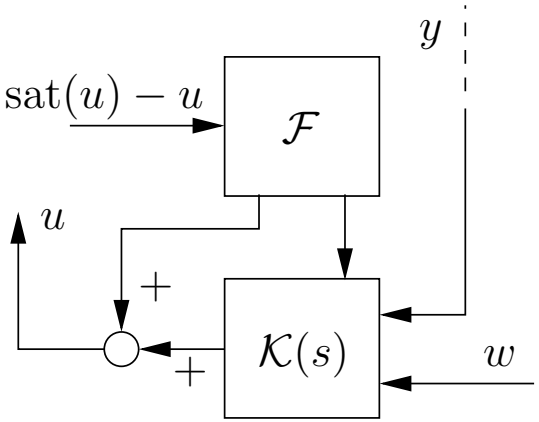

Full-authority

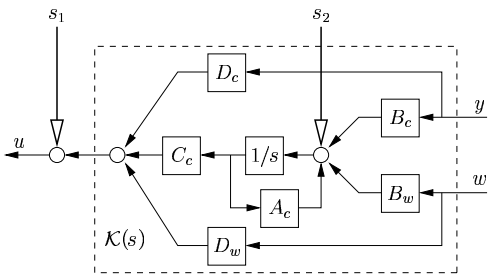

Measuring anti-windup success

Performance objective:

Finite input/output gain γ: For zero initial condition, $\|z(\cdot)\|_2 \leq \gamma \, \|w(\cdot)\|_2$ for all $w(\cdot)$

Finite unconstrained response recovery gain γ (Teel & Kapoor '97): For zero i.c. for $\mathcal{F}$ and all $w(\cdot)$,

$$\|z_\ell(\cdot) - z(\cdot)\|_2 \leq \gamma \|u_\ell(\cdot) - \mathrm{sat}(u_\ell(\cdot))\|_2$$

$\left(\mathcal{L}_2 \text{ norm: } \|s(\cdot)\|_2 := \sqrt{\int_0^\infty |s(t)|^2 \, dt}\right)$

Anti-windup closed-loop

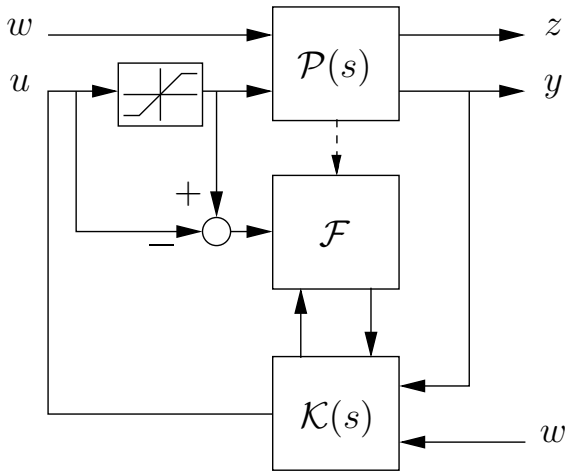

Unconstrained closed-loop

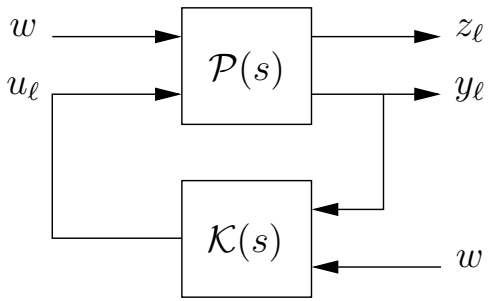

▷ Unconstrained response recovery implies small signal preservation & tracking.

▷ Finite I/O and certain structure on $\mathcal{F}$ imply small signal preservation & tracking.

Implication of finite gain

For the anti-windup closed-loop system

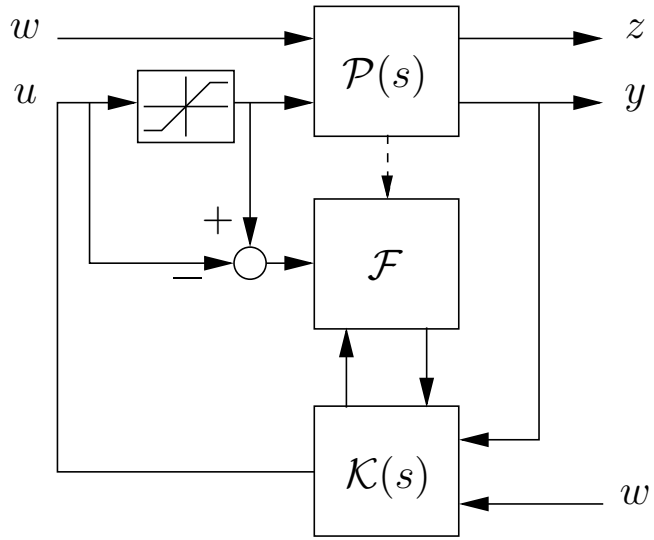

to admit a finite gain, in general, the plant is necessarily asymptotically stable.

Example:

$$\begin{aligned} \dot{x}_p &= u + w \\ z &= x_p \,, \end{aligned} \qquad\qquad u \in [-1,\ 1]$$

Regardless of u, no finite $\mathcal{L}_2$ gain from w to z exists

Absolute stability as a design tool

Internal structure of $\mathcal{F}$: linear (static gain, plant order filter, n_f-order filter)
External structure of $\mathcal{F}$: either external or full-authority
Performance measure: either input/output or unconstrained response recovery

---

Idea: Consider class of input nonlinearities and quadratic Lyapunov function

- possible convex synthesis formulation via LMIs
- possible necessary and sufficient results

Def'n: $\phi(\cdot)$ belongs to the sector $[0, I]$ if $\phi^T(s)(\phi(s) - s) \leq 0$ for all s.

Def'n: $\phi(\cdot)$ belongs to the incremental sector $[0, I]$ if $w \mapsto \phi(w + s) - \phi(s)$ belongs to sector $[0, I]$ for all s and $\phi(0) = 0$.

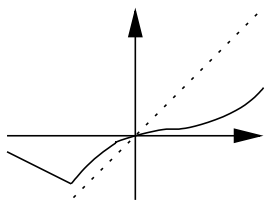

sector $[0, I]$

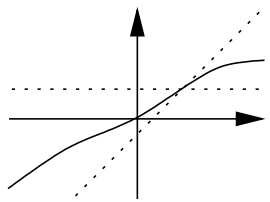

incremental sector $[0, I]$

Notice: $\mathrm{sat}(\cdot)$ belongs to the incremental sector $[0, I]$

Lyapunov formulation of quadratic I/O performance

Property: The anti-windup closed-loop has *quadratic I/O performance level* γ if

- $\exists\, \epsilon > 0$, $P = P^T > 0$ s.t. (with $x := [x_p^T \;\; x_c^T \;\; x_{aw}^T]^T$, $V(x) := x^T P x$)

$\dot{V}$ (along the dynamics of the anti-windup closed-loop) satisfies

$$\dot{V} < -\epsilon x^T x - \frac{1}{\gamma} z^T z + \gamma w^T w$$

for all $(x, \;\; w) \neq 0$ and all nonlinearities in incremental sector $[0, I]$, and

- the interconnection is well posed.

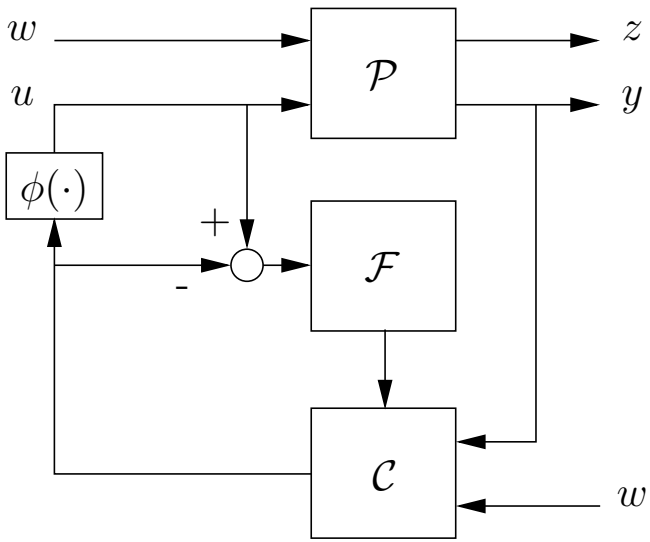

Note: Quadratic I/O performance level γ implies finite I/O gain γ of anti-windup closed-loop. (For zero initial condition, $\|z(\cdot)\|_2 \leq \gamma \, \|w(\cdot)\|_2$ for all $w(\cdot)$)

URR performance: key systems

Finite URR gain γ established via anti-windup c.l. & unconstrained c.l. in parallel

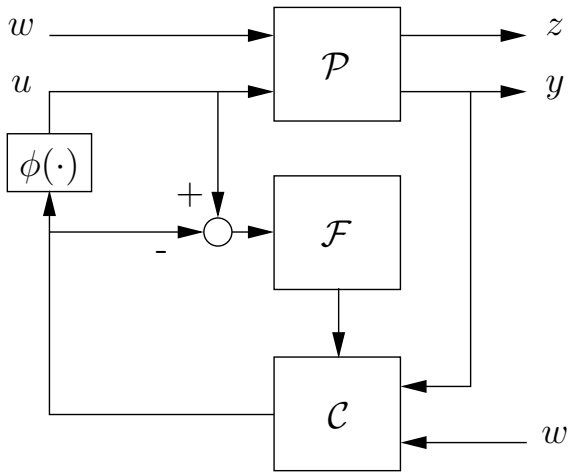

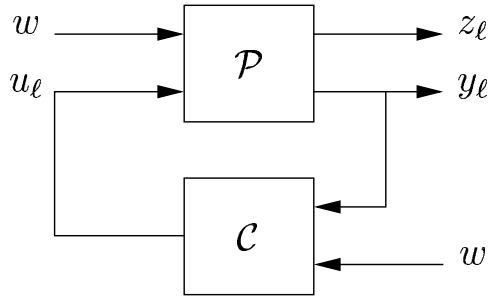

$$(\|z_\ell(\cdot) - z(\cdot)\|_2 \leq \gamma \|u_\ell(\cdot) - \mathrm{sat}(u_\ell(\cdot))\|_2)$$

or a cascade realization of unconstrained c.l. and mismatch system $\mathcal{W}$

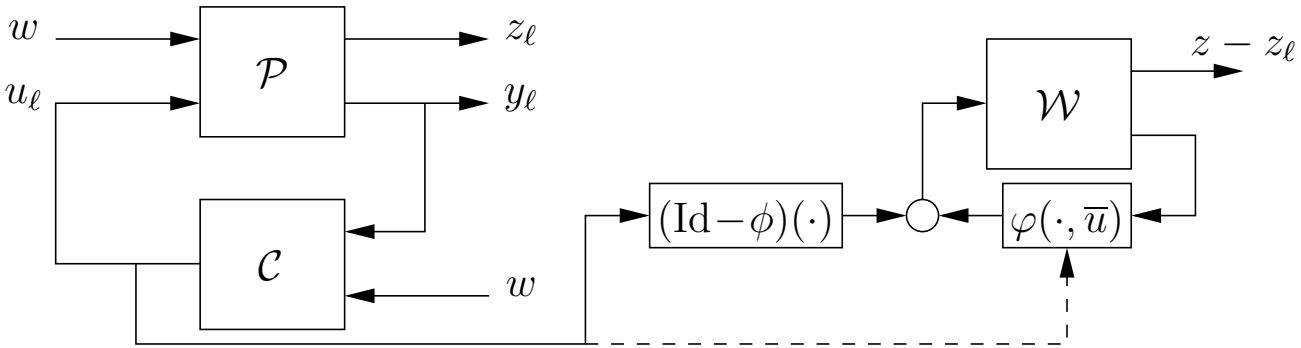

Lyapunov formuation of quadratic URR performance

Property: The anti-windup c.l. has *quadratic URR performance level* γ if

- $\exists\, \epsilon > 0$, $P = P^T > 0$ s.t. (with $x := \begin{bmatrix} x_p - (x_p)_\ell \\ x_c - (x_c)_\ell \\ x_{aw} \end{bmatrix}$, $V(x) := x^T P x$)

$\dot{V}$ (along the dynamics of the anti-windup and unconstrained c.l.) satisfies

$$\dot{V} < -\epsilon x^T x - \frac{1}{\gamma}|z - z_\ell|^2 + \gamma|u_\ell - \phi(u_\ell)|^2$$

for all $(x,\ u_\ell) \neq 0$ and all nonlinearities in incremental sector $[0, I]$, and

- the interconnection is well posed.

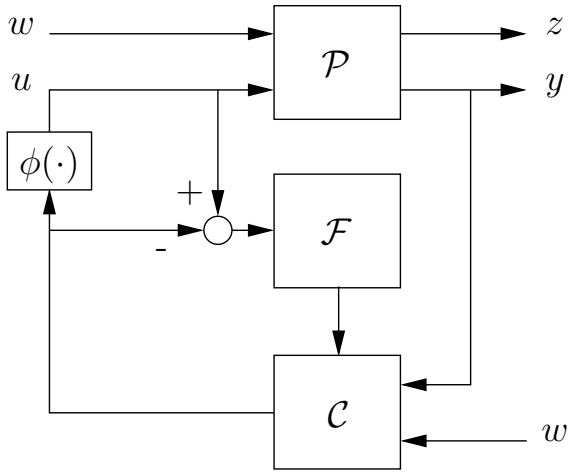

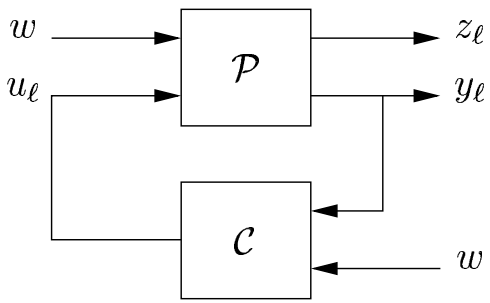

Note: Quadratic URR performance level γ implies finite URR gain γ of anti-windup c.l. (For all $w(\cdot)$, $\|z_\ell(\cdot) - z(\cdot)\|_2 \leq \gamma \|u_\ell(\cdot) - \mathrm{sat}(u_\ell(\cdot))\|_2$)

Feasibility **of the anti-windup problem**

Outline of the feasibility section

▷ Feasibility conditions of anti-windup design for some (perhaps large) quadratic (I/O or URR) performance level *(only worry about stability!)*

- Full-authority schemes
  - ⋆ LMI formulation & interpretation
- External schemes
  - ⋆ LMI formulation & interpretation

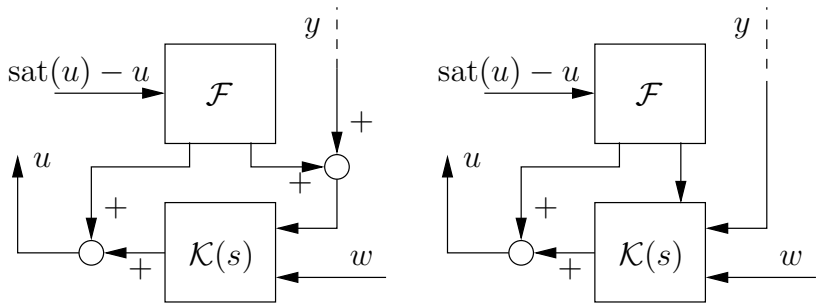

▷ Given γ, feasibility conditions of anti-windup design for guaranteed quadratic (I/O or URR) performance level γ *(worry about performance too!)*

- Full-authority schemes
  - ⋆ LMI formulation & interpretation
- External schemes
  - ⋆ LMI formulation & interpretation

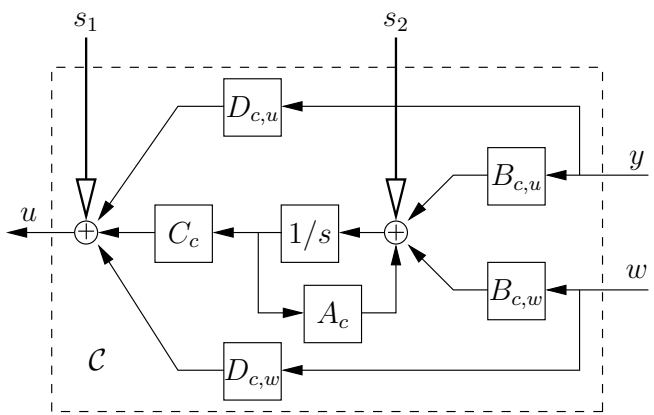

Useful notation: key systems

▷ The "plant"

$$\dot{x}_p = A_p\, x_p + B_{p,w}\, w + B_{p,u}\, u$$
$$z = C_{p,z}\, x_p + D_{p,zw}\, w + D_{p,zu}\, u$$

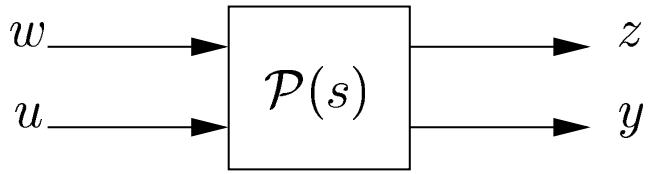

▷ The "unconstrained closed-loop system"

$$\begin{bmatrix} (\dot{x}_p)_\ell \\ (\dot{x}_k)_\ell \end{bmatrix} = A_{CL} \begin{bmatrix} (x_p)_\ell \\ (x_k)_\ell \end{bmatrix} + B_{CL,w}\, w$$
$$z_\ell = C_{CL} \begin{bmatrix} (x_p)_\ell \\ (x_k)_\ell \end{bmatrix} + D_{CL,w}\, w$$

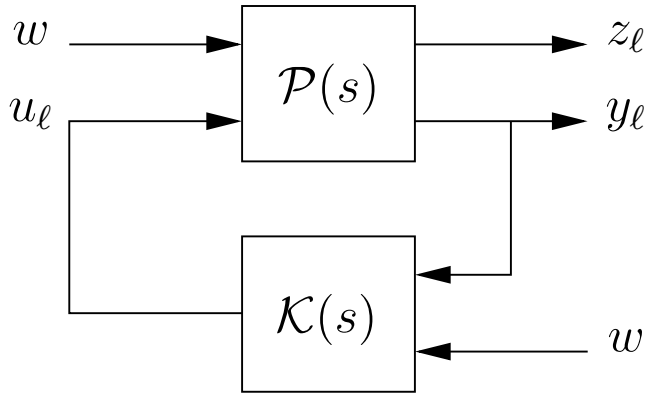

▷ The "open-loop system"

$$\begin{bmatrix} \dot{\widehat{x}}_p \\ \dot{\widehat{x}}_k \end{bmatrix} = A_{OL} \begin{bmatrix} \widehat{x}_p \\ \widehat{x}_k \end{bmatrix} + B_{OL,w}\, w + B_{OL,u} u + B_{OL,v}\, v$$
$$z_{OL} = C_{OL} \begin{bmatrix} \widehat{x}_p \\ \widehat{x}_k \end{bmatrix} + D_{OL,w}\, w + D_{OL,u} u$$

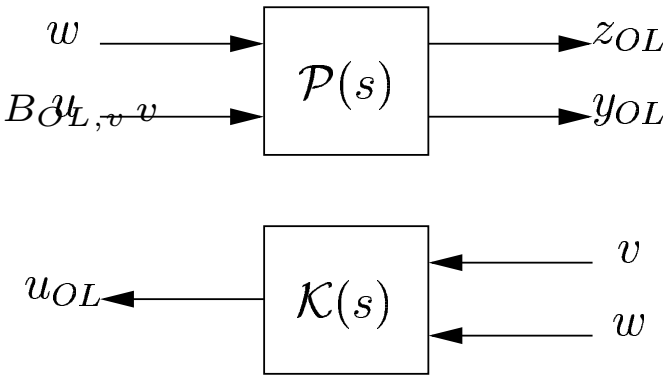

Quadratic Lyapunov and control Lyapunov functions

Def'n: Let $P = P^T > 0$. The function $x \mapsto x^T P x$ is said to be a *quadratic Lyapunov function* for the system $\dot{x} = A\,x$ if

$$x_\circ \neq 0 \quad \Rightarrow \quad x_\circ^T (A^T P + PA) x_\circ < 0\,.$$

Note: $\big(x_\circ \neq 0 \;\Rightarrow\; x_\circ^T (A^T P + PA) x_\circ < 0\big)$ iff $P^{-1} A^T + A P^{-1} < 0$

(Recall: Let $M \in I\!R^{n_1 \times n_1}$ be full rank. Then $N < 0$ iff $M^T N M < 0$)

Def'n: Let $P = P^T > 0$. The function $x \mapsto x^T P x$ is said to be a *quadratic control Lyapunov function* for the system $\dot{x} = A\,x + B\,u$ if

$$x_\circ \neq 0, \quad B^T P x_\circ = 0 \quad \Rightarrow \quad x_\circ^T (A^T P + PA) x_\circ < 0$$

Lemma: The function $x \mapsto x^T P x$ is a quadratic control Lyapunov function for the system $\dot{x} = A\,x + B\,u$ iff $B_\perp^T \left(P^{-1} A^T + A P^{-1}\right) B_\perp < 0$

Static anti-windup design

Theorem: Consider either quadratic performance measure:

- There exists static full-authority anti-windup that guarantees some finite quadratic performance level if and only if there exists a matrix R such that

$$R = R^T = \begin{bmatrix} R_{11} & R_{12} \\ R_{12}^T & R_{22} \end{bmatrix} > 0, \qquad \begin{aligned} R_{11}A_p^T + A_pR_{11} &< 0, \\ RA_{CL}^T + A_{CL}R &< 0. \end{aligned}$$

- There exists static external anti-windup that guarantees some finite quadratic performance level if and only if there exists a matrix R such that ($B_{OL,v\perp}$ maximal full rank s.t. $B_{OL,v}^T B_{OL,v\perp} = 0$)

$$R = R^T > 0, \qquad \begin{aligned} B_{OL,v\perp}^T \left(RA_{OL}^T + A_{OL}R\right) B_{OL,v\perp} &< 0, \\ RA_{CL}^T + A_{CL}R &< 0. \end{aligned}$$

$$\begin{aligned} R_{11}A_p^T + A_pR_{11} &< 0, \\ RA_{CL}^T + A_{CL}R &< 0. \end{aligned} \quad \Leftrightarrow$$

'quasi' common quadratic Lyapunov function (common QLF if $R_{11} = R$) (with $w = 0$)

$$\begin{aligned} B_{OL,v\perp}^T \left(RA_{OL}^T + A_{OL}R\right) B_{OL,v\perp} &< 0, \\ RA_{CL}^T + A_{CL}R &< 0, \end{aligned} \quad \Leftrightarrow$$

a Lyapunov function for CL is CLF for OL (with $w = 0$)

▷ Simple LMI necessary and sufficient existence conditions with interpretation.

Plant-order anti-windup design

Theorem: Consider either quadratic performance measure:

- There exists plant-order full-authority anti-windup that guarantees some finite quadratic performance level if and only if there exist matrices R and S such that

$$R = R^T > 0, \qquad RA_p^T + A_pR < 0,$$
$$S = S^T > 0 \qquad SA_{CL}^T + A_{CL}S < 0.$$

- There exists plant-order external anti-windup that guarantees some finite quadratic performance level if and only if there exist matrices R and S such that

$$R = R^T > 0, \qquad RA_p^T + A_pR < 0,$$
$$S = S^T > 0 \qquad SA_{CL}^T + A_{CL}S < 0.$$

$$RA_p^T + A_pR < 0, \quad SA_{CL}^T + A_{CL}S < 0. \quad \Leftrightarrow$$

Plant and unconstrained closed-loop stable

▷ Simple LMI necessary and sufficient existence conditions with interpretation

Feasibility

Generic order anti-windup design

Theorem: Consider either quadratic performance measure:

- There exists an order n_f full-authority anti-windup that guarantees some finite quadratic performance level iff there exists a pair (R, S) such that

$$R = R^T = \begin{bmatrix} R_{11} & R_{12} \\ R_{12}^T & R_{22} \end{bmatrix} > 0, \qquad \begin{aligned} R_{11}A_p^T + A_pR_{11} &< 0, \\ SA_{CL}^T + A_{CL}S &< 0 \end{aligned}$$

$$S = S^T > 0 \qquad \operatorname{rank}(R - S) \leq n_f$$

- There exists an order n_f external anti-windup that guarantees some finite quadratic performance level if and only if there exists a pair (R, S) such that

$$R = R^T > 0, \qquad \begin{aligned} B_{OL,v\perp}^T \left(RA_{OL}^T + A_{OL}R\right) B_{OL,v\perp} &< 0, \\ RA_{CL}^T + A_{CL}R &< 0. \end{aligned}$$

$$S = S^T > 0 \qquad \operatorname{rank}(R - S) \leq n_f$$

$$\begin{aligned} RA_p^T + A_pR &< 0, \\ SA_{CL}^T + A_{CL}S &< 0. \end{aligned} \quad \Leftrightarrow \quad \text{Plant and unconstrained closed-loop stable}$$

$$\operatorname{rank}(R - S) \leq n_f \quad \Leftrightarrow \quad \text{Nonconvex rank condition}$$

▷ Necessary and sufficient conditions in terms of Nonlinear matrix inequalities

Quadratic disturbance attenuation Lyapunov function

$$\begin{aligned} \dot{x} &= Ax + B_w w \\ z &= Cx + D_w w \end{aligned}$$

Definition: The positive definite function $x \mapsto x^T P x$ is said to be a *quadratic disturbance attenuation Lyapunov function (with attenuation γ)* if $(x,\ w) \neq 0$ implies

$$2x^T P(Ax + B_w w) < -\frac{1}{\gamma}\left|Cx + D_w w\right|^2 + \gamma|w|^2,$$

Lemma (BRL): The function $x \mapsto x^T P x$ is a quadratic disturbance attenuation Lyapunov function for the system $\dot{x} = A\,x + B_w\,w\ , \quad z = C\,x + D_w\,w$ iff

$$P^{-1} = P^{-T} > 0$$

$$\begin{bmatrix} P^{-1}A^T + AP^{-1} & \star & \star \\ B_w^T & -\gamma I & \star \\ CP^{-1} & D_w & -\gamma I \end{bmatrix} < 0$$

Feasibility

Static anti-windup design for I/O performance

Th'm: Given γ, there exists a static linear full-authority anti-windup compensator that guarantees quadratic I/O performance of level γ

if and only if

there exists a solution R to the following LMI problem:

$$R = R^T = \begin{bmatrix} R_{11} & R_{12} \\ R_{12}^T & R_{22} \end{bmatrix} > 0 \,,$$

$$\begin{bmatrix} R_{11}A_p^T + A_pR_{11} & \star & \star \\ B_{p,w}^T & -\gamma I_{n_w} & \star \\ C_{p,z}R_{11} & D_{p,zw} & -\gamma I_{n_z} \end{bmatrix} < 0 \,,$$

$$\begin{bmatrix} RA_{CL}^T + A_{CL}R & \star & \star \\ B_{CL,w}^T & -\gamma I_{n_w} & \star \\ C_{CL,z}R & D_{CL,zw} & -\gamma I_{n_z} \end{bmatrix} < 0 \,.$$

(γ easily minimized as LMI eigenvalue problem)

Interpretation: There exists a ("quasi" if controller is dynamic) common quadratic disturbance attenuation Lyapunov function between the plant and the unconstrained closed-loop system with input w and output z.

Feasibility

Plant-order anti-windup design for I/O performance

Th'm: Given γ, there exists a plant-order linear full-authority anti-windup compensator that guarantees quadratic I/O performance of level γ

if and only if

there exists a solution $(R_{11},\ S)$ to the following LMI problem:

$$
\begin{aligned}
R_{11} = R_{11}^T &> 0\,, \\
S = S^T = \begin{bmatrix} S_{11} & S_{12} \\ S_{12}^T & S_{22} \end{bmatrix} &> 0\,, \\
\begin{bmatrix} R_{11}A_p^T + A_pR_{11} & \star & \star \\ B_{p,w}^T & -\gamma I_{n_w} & \star \\ C_{p,z}R_{11} & D_{p,zw} & -\gamma I_{n_z} \end{bmatrix} &< 0\,, \\
\begin{bmatrix} SA_{CL}^T + A_{CL}S & \star & \star \\ B_{CL,w}^T & -\gamma I_{n_w} & \star \\ C_{CL,z}S & D_{CL,zw} & -\gamma I_{n_z} \end{bmatrix} &< 0 \\
R_{11} - S_{11} &\geq 0
\end{aligned}
$$

(γ easily minimized as LMI eigenvalue problem)

Where is n_p??: Plant-oder anti-windup provides globally optimal performance (no need to increase the anti-windup compensator size)

Feasibility **n_f-order anti-windup design for I/O performance**

Th'm: Given γ, there exists an n_f-order (and larger) linear full-authority anti-windup compensator that guarantees quadratic I/O performance of level γ

if and only if

there exists a solution (R_{11}, S) to the following nonconvex feasibility problem:

$$
\begin{aligned}
R_{11} = R_{11}^T &> 0\,, \\
S = S^T = \begin{bmatrix} S_{11} & S_{12} \\ S_{12}^T & S_{22} \end{bmatrix} &> 0\,, \\
\begin{bmatrix} R_{11}A_p^T + A_pR_{11} & \star & \star \\ B_{p,w}^T & -\gamma I_{n_w} & \star \\ C_{p,z}R_{11} & D_{p,zw} & -\gamma I_{n_z} \end{bmatrix} &< 0\,, \\
\begin{bmatrix} SA_{CL}^T + A_{CL}S & \star & \star \\ B_{CL,w}^T & -\gamma I_{n_w} & \star \\ C_{CL,z}S & D_{CL,zw} & -\gamma I_{n_z} \end{bmatrix} &< 0 \\
R_{11} - S_{11} &\geq 0\,, \\
\mathrm{rank}(R_{11} - S_{11}) &\leq n_f
\end{aligned}
$$

▷ Nonlinear conditions to be solved for "reduced order" anti-windup design

Feasibility

n_f-order anti-windup design for URR performance

Th'm: Given γ, there exists a n_f-order linear full-authority anti-windup compensator that guarantees quadratic URR performance of level γ

if and only if

there exists a solution $(R_{11},\ S,\ \pi)$ to the following nonconvex problem:

$$
\begin{array}{rcl}
R_{11} = R_{11}^T & > & 0\,, \\
S = S^T = \begin{bmatrix} S_{11} & S_{12} \\ S_{12}^T & S_{22} \end{bmatrix} & > & 0\,, \\
\begin{bmatrix} R_{11}A_p^T + A_pR_{11} & \star & \star \\ B_{p,u}^T & -\gamma I_{n_u} & \star \\ C_{p,z}R_{11} & D_{p,zu} & -\gamma I_{n_z} \end{bmatrix} & < & 0\,, \\
\begin{bmatrix} SA_{CL}^T + A_{CL}S & \star & \star \\ C_{CL,u}S & -\pi I_{n_u} & \star \\ C_{CL,z}S & 0 & -\gamma I_{n_z} \end{bmatrix} & < & 0 \\
R_{11} - S_{11} & \geq & 0\,, \\
\mathrm{rank}(R_{11} - S_{11}) & \leq & n_f
\end{array}
$$

▷ Nonlinear constraints in general. Linear in the static and n_p-order case

Feasibility

Quadratic dist. att. control Lyapunov function

$$\begin{aligned} \dot{x} &= Ax + B_w w + B_u u \\ z &= Cx + D_w w \end{aligned}$$

Definition: The positive definite function $x \mapsto x^T P x$ is said to be a *quadratic disturbance attenuation control Lyapunov function (with attenuation γ)* if $(x,\ w) \neq 0$ and $B_u^T P x = 0$ implies

$$2x^T P(Ax + B_w w) < -\frac{1}{\gamma}\left|Cx + D_w w\right|^2 + \gamma|w|^2.$$

Lemma: The function $x \mapsto x^T P x$ is a quadratic dist. att. control Lyapunov function for the system $\dot{x} = A\,x + B_w\,w + B_u\,u\ , \quad z = C\,x + D_w\,w$ iff

$$P^{-1} = P^{-T} > 0$$

$$\begin{bmatrix} (B_{u\perp})^T \left(P^{-1}A^T + AP^{-1}\right) B_{u\perp} & \star & \star \\ B_w^T B_{u\perp} & -\gamma I & \star \\ CP^{-1}B_{u\perp} & D_w & -\gamma I \end{bmatrix} < 0$$

External — Static anti-windup design for I/O performance

Th'm: Given γ, there exists a static linear external anti-windup compensator that guarantees quadratic I/O performance of level γ

if and only if

there exists a solution R to the following LMI problem:

$$R = R^T > 0\,,$$

$$\begin{bmatrix} (B_{OL,u_c\perp})^T \left(RA_{OL}^T + A_{OL}R\right) B_{OL,u_c\perp} & \star & \star \\ B_{OL,w}^T B_{OL,u_c\perp} & -\gamma I_{n_w} & \star \\ C_{OL,z} R B_{OL,u_c\perp} & D_{OL,zw} & -\gamma I_{n_z} \end{bmatrix} < 0\,,$$

$$\begin{bmatrix} RA_{CL}^T + A_{CL}R & \star & \star \\ B_{CL,w}^T & -\gamma I_{n_w} & \star \\ C_{CL,z} R & D_{CL,zw} & -\gamma I_{n_z} \end{bmatrix} < 0$$

(γ easily minimized as LMI eigenvalue problem)

Interpretation: There exists $x \mapsto x^T R^{-1} x$ that is

- ▷ a quadratic disturbance attenuation control Lyapunov function with gain γ for the open-loop system with exogenous input w, control input u_c and output z
- ▷ a quadratic disturbance attenuation Lyapunov function with gain γ for the closed-loop system with input w and output z.

Feasibility

External — Plant-order anti-windup design for I/O perf.

Th'm: Given γ, there exists a plant-order linear external anti-windup compensator that guarantees quadratic I/O performance of level γ

if (but not necessarily only if)

there exists a solution $(R_{11},\ S)$ to the following LMI problem:

$$R = R^T = \begin{bmatrix} R_{11} & S_{12} \\ S_{12}^T & S_{22} \end{bmatrix} > 0\,,$$

$$S = S^T = \begin{bmatrix} S_{11} & S_{12} \\ S_{12}^T & S_{22} \end{bmatrix} > 0\,,$$

$$\begin{bmatrix} (B_{OL,u_c\perp})^T \left(RA_{OL}^T + A_{OL}R\right) B_{OL,u_c\perp} & \star & \star \\ B_{OL,w}^T B_{OL,u_c\perp} & -\gamma I_{n_w} & \star \\ C_{OL,z} R B_{OL,u_c\perp} & D_{OL,zw} & -\gamma I_{n_z} \end{bmatrix} < 0\,,$$

$$\begin{bmatrix} SA_{CL}^T + A_{CL}S & \star & \star \\ B_{CL,w}^T & -\gamma I_{n_w} & \star \\ C_{CL,z} S & D_{CL,zw} & -\gamma I_{n_z} \end{bmatrix} < 0$$

(γ easily minimized as LMI eigenvalue problem)

Feasibility

External — n_f-order anti-windup design for I/O perf.

Th'm: Given γ, there exists a n_f-order linear external anti-windup compensator that guarantees quadratic I/O performance of level γ

if and only if

there exists a solution $(R,\ S)$ to the following LMI problem:

$$
\begin{array}{rcl}
R = R^T & > & 0\,, \\
S = S^T & > & 0\,, \\
\begin{bmatrix} (B_{OL,u_c\perp})^T \left(RA_{OL}^T + A_{OL}R\right) B_{OL,u_c\perp} & \star & \star \\ B_{OL,w}^T B_{OL,u_c\perp} & -\gamma I_{n_w} & \star \\ C_{OL,z} R B_{OL,u_c\perp} & D_{OL,zw} & -\gamma I_{n_z} \end{bmatrix} & < & 0\,, \\
\begin{bmatrix} SA_{CL}^T + A_{CL}S & \star & \star \\ B_{CL,w}^T & -\gamma I_{n_w} & \star \\ C_{CL,z} S & D_{CL,zw} & -\gamma I_{n_z} \end{bmatrix} & < & 0 \\
R - S & \geq & 0 \\
\mathrm{rank}(R-S) & \leq & n_f\,.
\end{array}
$$

▷ Nonlinear conditions to be solved for "reduced order" anti-windup design

Feasibility

External — n_f-order anti-windup design for URR performance

Th'm: Given γ, there exists an n_f-order linear external anti-windup compensator that guarantees quadratic URR performance of level γ

if and only if

there exists a solution $(R,\, S,\, \pi)$ to the following nonconvex problem:

$$
\begin{array}{rcl}
R = R^T & > & 0\,, \\
S = S^T & > & 0\,, \\
\begin{bmatrix} (B_{OL,u_c\perp})^T \left(RA_{OL}^T + A_{OL}R\right) B_{OL,u_c\perp} & \star & \star \\ B_{OL,u_p}^T B_{OL,u_c\perp} & -\gamma I_{n_u} & \star \\ C_{OL,z} R B_{OL,u_c\perp} & D_{OL,zu_p} & -\gamma I_{n_z} \end{bmatrix} & < & 0\,, \\
\begin{bmatrix} SA_{CL}^T + A_{CL}S & \star & \star \\ C_{CL,u}^T S & -\pi I_{n_u} & \star \\ C_{CL,z} S & 0 & -\gamma I_{n_z} \end{bmatrix} & < & 0 \\
R - S & \geq & 0 \\
\mathrm{rank}(R-S) & \leq & n_f\,.
\end{array}
$$

▷ Nonlinear constraints in general. Linear in the static and n_p-order case

Anti-windup *synthesis*

Synthesis

Static anti-windup for I/O gain

Step 1: Given γ, determine a solution R to the appropriate (full-authority or external) feasibility LMI problem.

Step 2: Select any scalar $\delta > 0$ and define $U = \delta I$.

Step 3: Define

$$\Psi := \begin{bmatrix} RA_{CL}^T + A_{CL}R & \star & \star & \star \\ UB_{CL,q}^T + C_{CL,u}R & D_{CL,uq}U + UD_{CL,uq}^T - 2U & \star & \star \\ B_{CL,w}^T & D_{CL,uw}^T & -\gamma I_{n_w} & \star \\ C_{CL,z}R & D_{CL,zq}U & D_{CL,zw} & -\gamma I_{n_z} \end{bmatrix},$$

$$G := \begin{bmatrix} 0 & -U & 0 & 0 \end{bmatrix},$$

$$H := \begin{bmatrix} B_{CL,s}^T & D_{CL,us}^T & 0 & D_{CL,zs}^T \end{bmatrix}.$$

$(B_{CL,s},\ D_{CL,us},\ D_{CL,zs})$ depend on external structure

Step 4: Construct $\mathcal{F}$ s.t. $s_1 = D_{aw,1}\, u_{aw},\ s_2 = D_{aw,2}\, u_{aw}$ using a solution $(D_{aw,1},\ D_{aw,2})$ to the LMI problem

$$\Psi + G^T \begin{bmatrix} D_{aw,1} \\ D_{aw,2} \end{bmatrix}^T H^T + H \begin{bmatrix} D_{aw,1} \\ D_{aw,2} \end{bmatrix} G < 0\,.$$

(Once Step 1 is completed, all steps can be completed)

Synthesis

Static anti-windup for URR gain

Step 1: Given γ, determine a solution $(R,\ \pi)$ to the appropriate (full-authority or external) feasibility LMI problem.

Step 2: Select a scalar $\delta > 0$ s.t. $\gamma\delta^2 + 2\delta > \pi$ and define $U = \delta I$.

Step 3: Define

$$\Psi := \begin{bmatrix} RA_{CL}^T + A_{CL}R & \star & \star & \star \\ UB_{CL,q}^T + C_{CL,u}R & D_{CL,uq}U + UD_{CL,uq}^T - 2U & \star & \star \\ B_{CL,q}^T & D_{CL,uq}^T & -\gamma I_{n_u} & \star \\ C_{CL,z}R & D_{CL,zq}U & D_{CL,zq} & -\gamma I_{n_z} \end{bmatrix},$$

$$G := \begin{bmatrix} 0 & -U & -I_{n_u} & 0 \end{bmatrix},$$

$$H := \begin{bmatrix} B_{CL,s}^T & D_{CL,us}^T & 0 & D_{CL,zs}^T \end{bmatrix}.$$

$(B_{CL,s},\ D_{CL,us},\ D_{CL,zs})$ depend on external structure

Step 4: Construct $\mathcal{F}$ s.t. $s_1 = D_{aw,1}\,u_{aw},\ s_2 = D_{aw,2}\,u_{aw}$ using a solution $(D_{aw,1},\ D_{aw,2})$ to the LMI problem

$$\Psi + G^T \begin{bmatrix} D_{aw,1} \\ D_{aw,2} \end{bmatrix}^T H^T + H \begin{bmatrix} D_{aw,1} \\ D_{aw,2} \end{bmatrix} G < 0\,.$$

(Once Step 1 is completed, all steps can be completed)

Dynamic anti-windup

Step 1: Given γ, determine a solution $(R,\ S)$ to the appropriate (full-authority or external) feasibility LMI problem.

Step 2: If R is not defined, $R := \begin{bmatrix} R_{11} & S_{12} \\ S_{12}^T & S_{22} \end{bmatrix}$. Define $Q_{12} \in I\!R^{n_{CL} \times n_{aw}}$ and Q_{22} via $RS^{-1}R - R = Q_{12}Q_{12}^T$ and $Q_{22} := \begin{bmatrix} R & Q_{12} \\ Q_{12}^T & Q_{22} \end{bmatrix}$.

Step 3: Select any scalar $\delta > 0$ and define $U = \delta I$.

Step 4: Define appropriate Ψ, G and H explicitly from realization of $\mathcal{P}$ and $\mathcal{C}$.

Step 5: Find state-space realization of $\mathcal{F}$ by finding a solution $(A_{aw},\ B_{aw},\ C_{aw,1},\ C_{aw,1},\ D_{aw,1},\ D_{aw,2})$ to the LMI problem

$$\Psi + G^T \begin{bmatrix} A_{aw} & B_{aw} \\ C_{aw,1} & D_{aw,1} \\ C_{aw,1} & D_{aw,2} \end{bmatrix}^T H^T + H \begin{bmatrix} A_{aw} & B_{aw} \\ C_{aw,1} & D_{aw,1} \\ C_{aw,1} & D_{aw,2} \end{bmatrix} G < 0\,.$$

(Once Step 1 is completed, all steps can be completed)

Examples

The F8 aircraft

▷ Longitudinal dynamics of an F8 aircraft (Kapasouris et al, 1988)

▷ Plant: four states, two inputs, two outputs, exponentially stable

- S: Pitch rate (rad/s); forward speed (ft/s); angle of attack (rad); pitch angle (rad)
- I: Elevator angle (deg); Flaperon angle (deg)
- O: Pitch angle (deg); Flight path angle (deg)

▷ Eighth-order unconstrained controller induces highly desirable response.

Saturation of both inputs at $\pm 25 deg$ causes sever performance loss

The F8 aircraft: unconstrained response

Unconstrained response

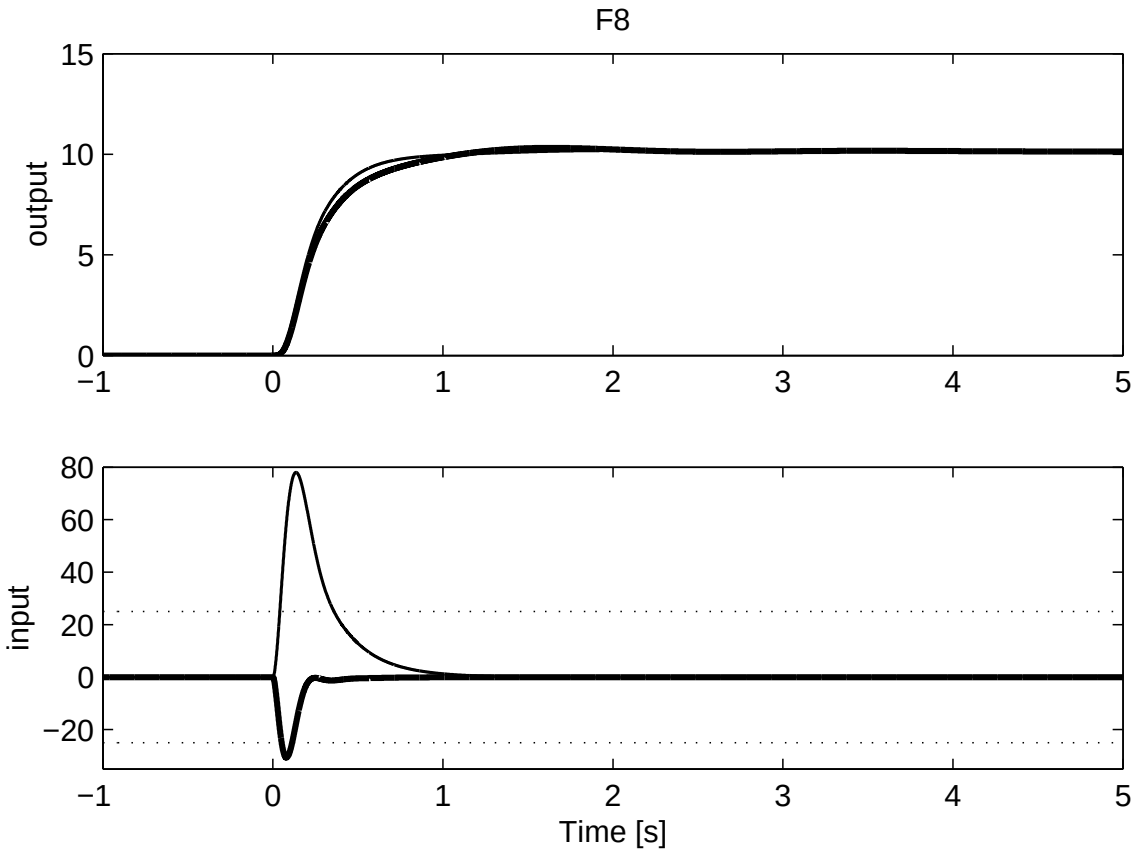

(Desirable response!)

Output: pitch angle (thick) and flight path angle (thin)

Input: elevator angle (thick) and flaperon angle (thin)

The F8 aircraft: saturated response

Saturated response

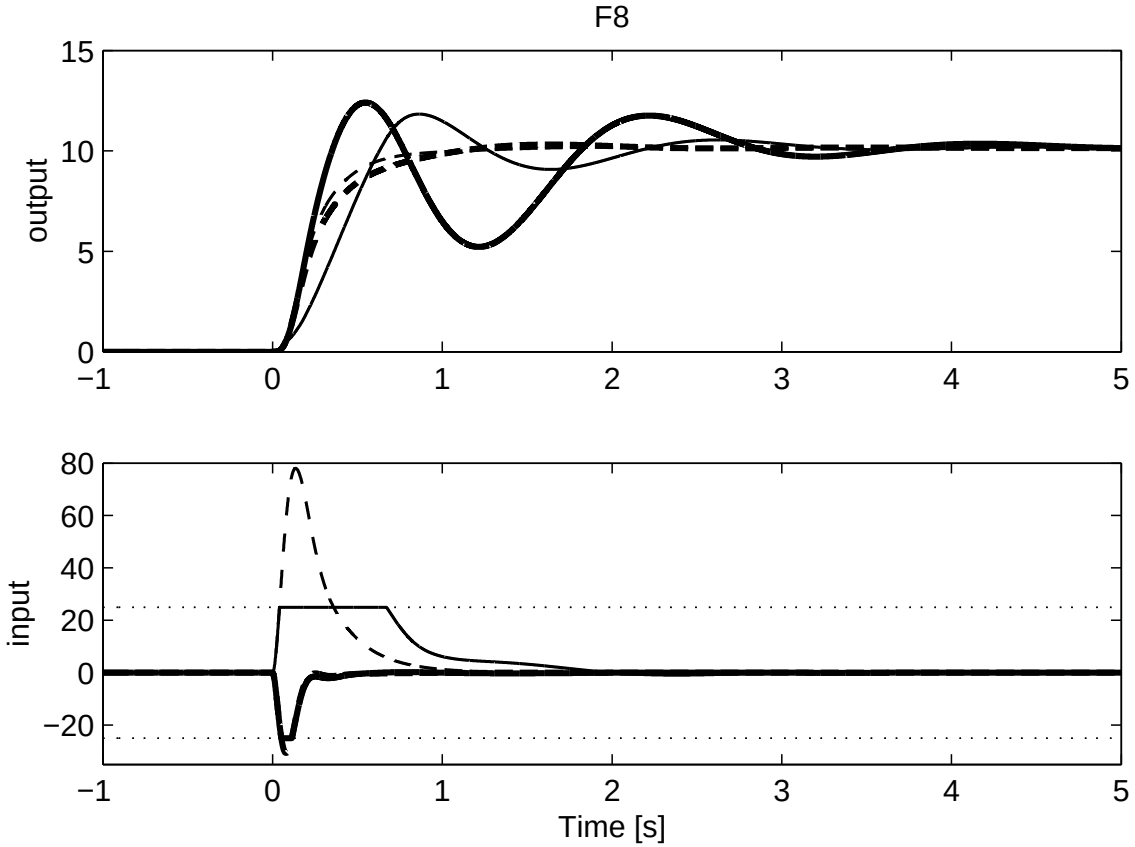

(Substantial degradation of response!)

Examples

The F8 aircraft: anti-windup designs

STATIC ANTI-WINDUP

Full-authority anti-windup: There does exist static linear full-authority anti-windup that guarantees quadratic performance since the associated LMI is feasible.

▷ Use finite I/O gain synthesis

▷ Use finite URR gain synthesis

External anti-windup: There does not exist static linear external anti-windup that guarantees quadratic performance since the associated LMI is infeasible.

PLANT-ORDER ANTI-WINDUP (always feasible)

Full-authority anti-windup:

▷ Use finite I/O gain synthesis

▷ Use finite URR gain synthesis

External anti-windup:

▷ Use finite I/O gain synthesis

▷ Use finite URR gain synthesis

The F8 aircraft (static full-authority I/O)

Anti-windup closed-loop response

(Static linear full-authority anti-windup designed for quadratic I/O performance)

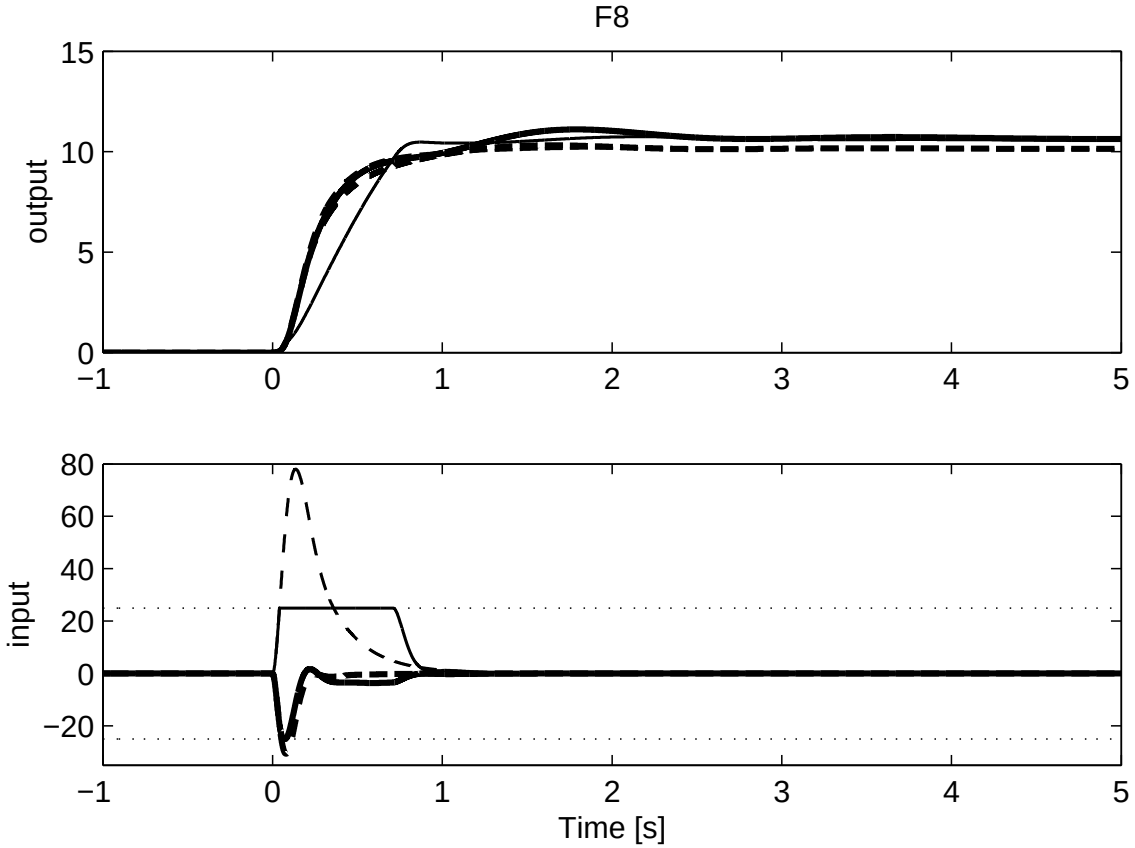

The F8 aircraft (static full-authority URR)

Anti-windup closed-loop response

(Static linear full-authority anti-windup designed for quadratic URR performance)

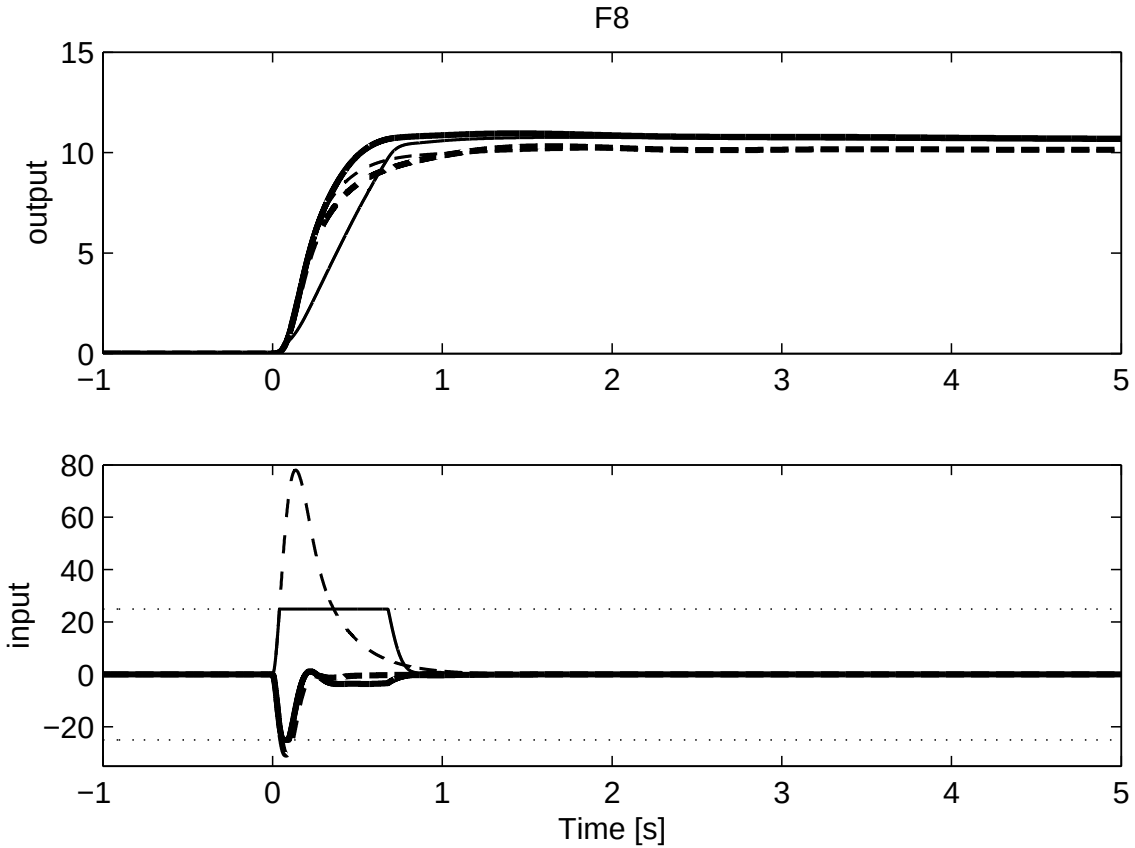

The F8 aircraft (n_p-order full-authority I/O)

Anti-windup closed-loop response

(Plant-order full-authority anti-windup designed for quadratic I/O performance)

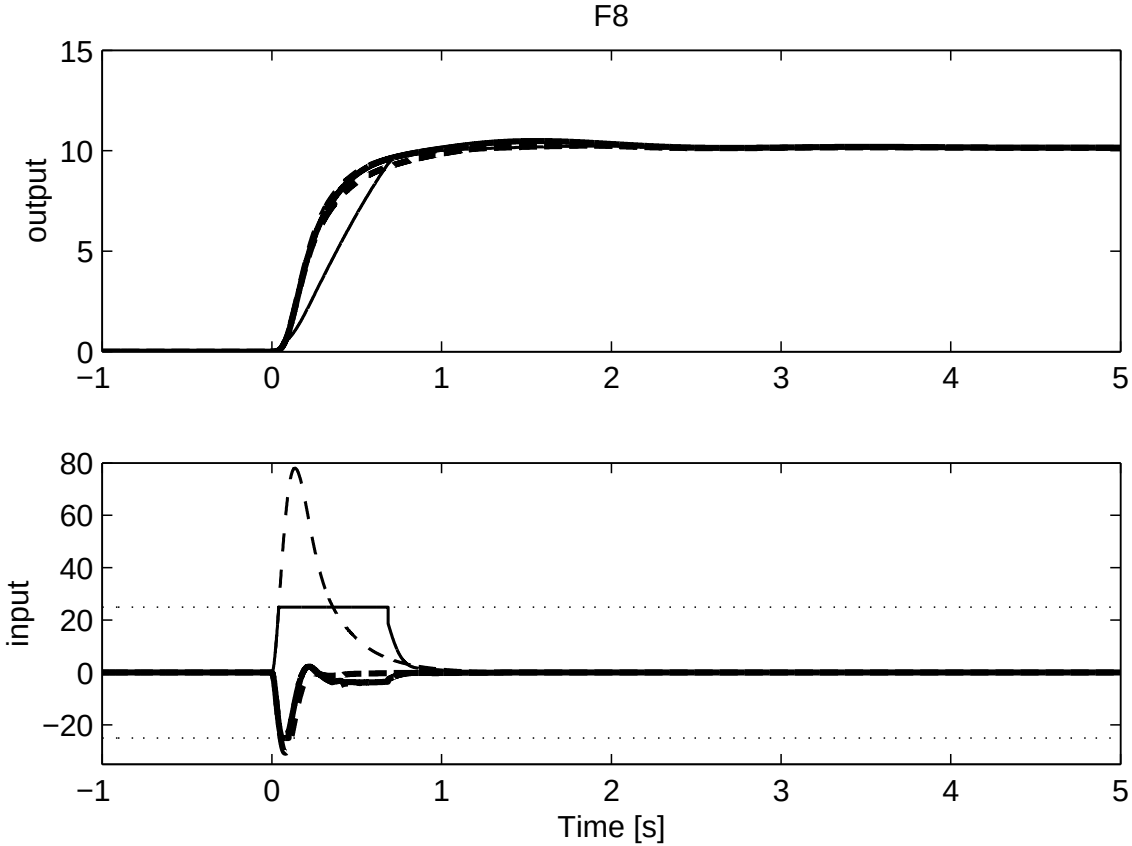

(Significant improvement over static anti-windup designs:

quick convergence, no oscillations, no added overshoot)

The F8 aircraft (n_p-order full-authority URR)

Anti-windup closed-loop response

(Plant-order full-authority anti-windup designed for quadratic URR performance)

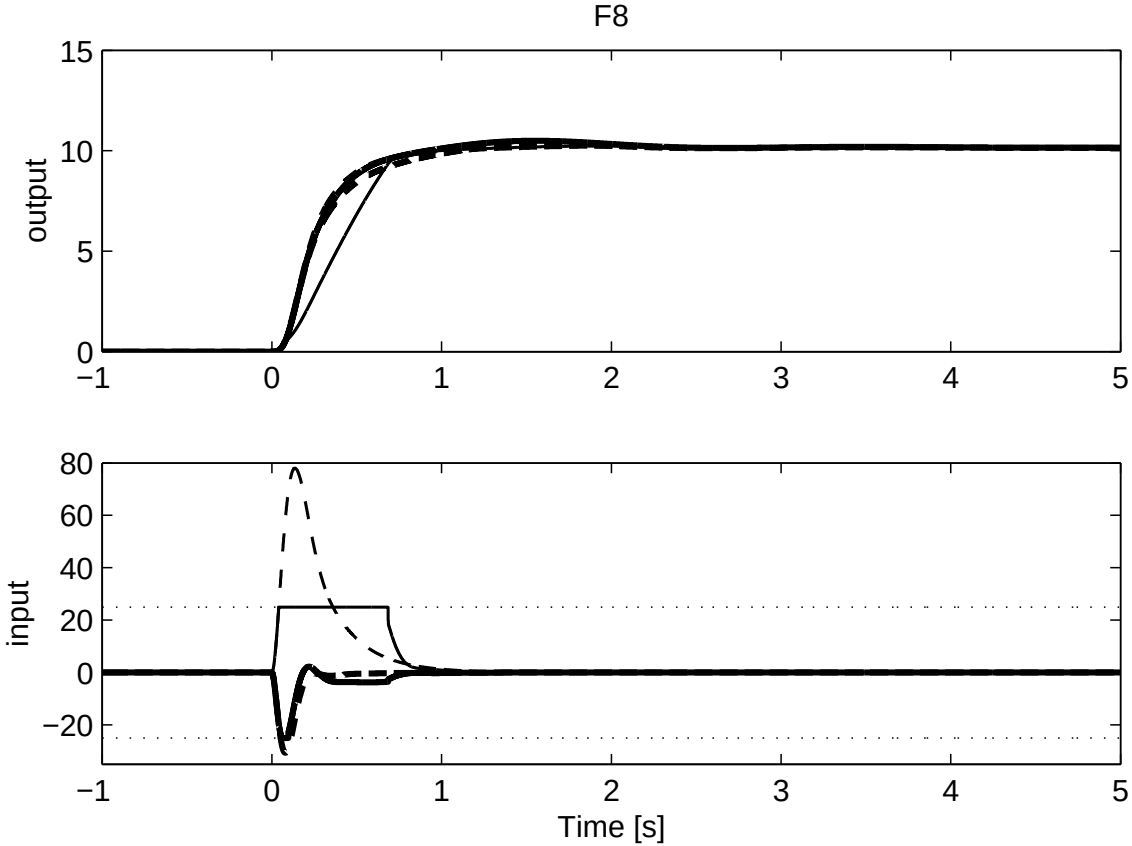

(Also significant improvement over static anti-windup designs:

quick convergence, no oscillations, no added overshoot)

The F8 aircraft (n_p-order external I/O)

Anti-windup closed-loop response

(Plant-order external anti-windup designed for quadratic I/O performance)

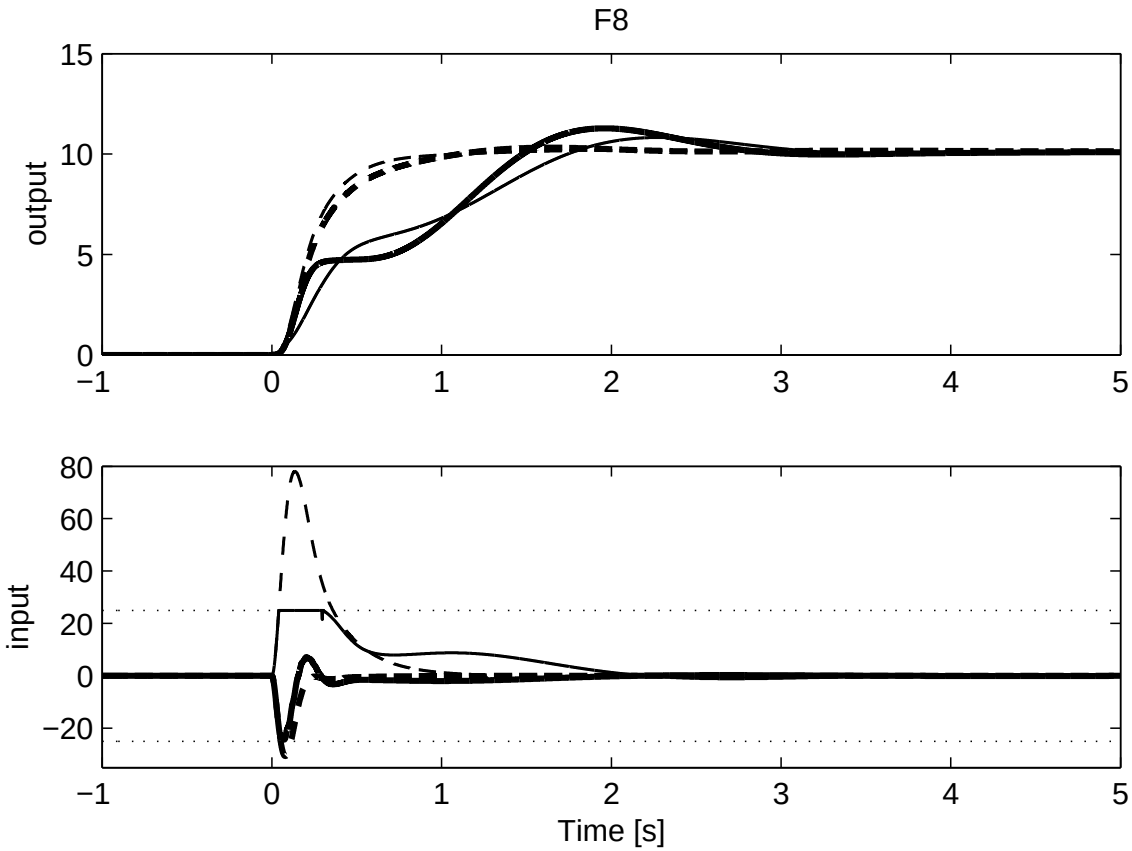

(Recall no static linear external anti-windup design for quadratic performance)

The F8 aircraft (n_p-order external URR)

Anti-windup closed-loop response

(Plant-order external anti-windup designed for quadratic URR performance)

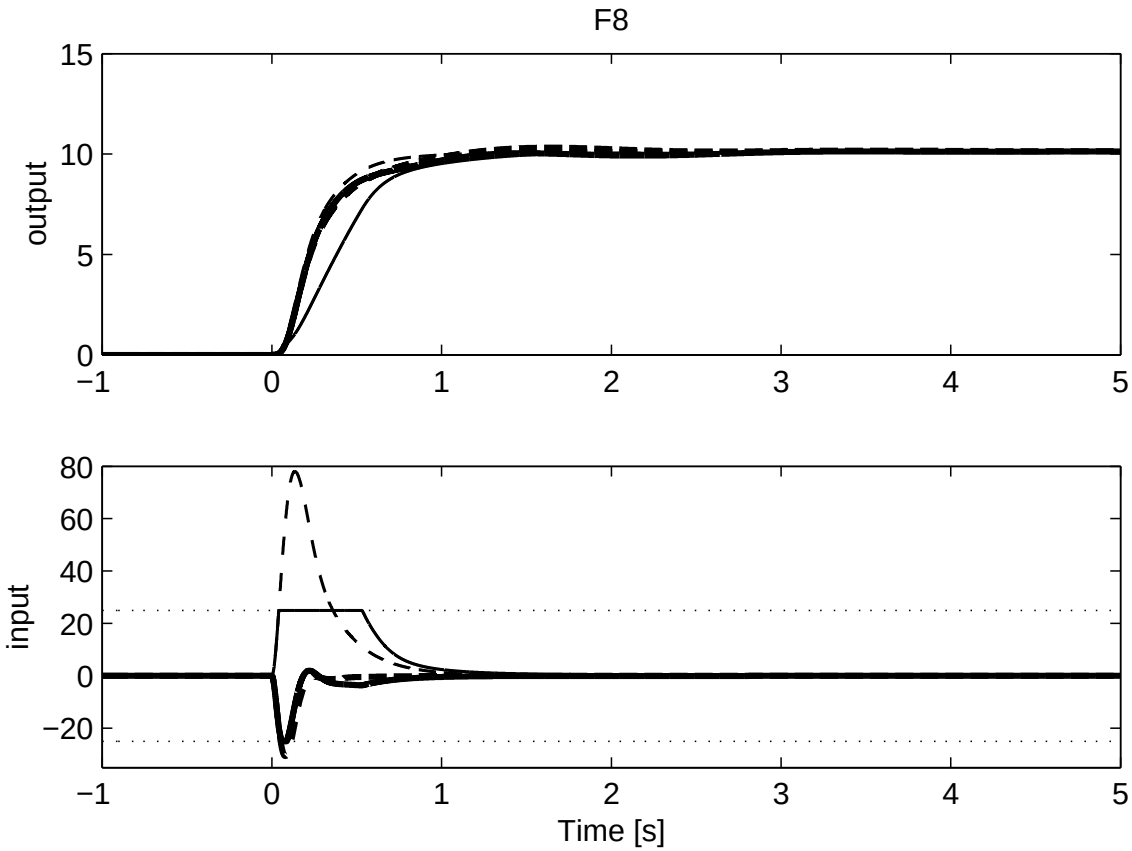

(Recall no static linear external anti-windup design for quadratic performance)

Experiment: Spring-gantry system (I)

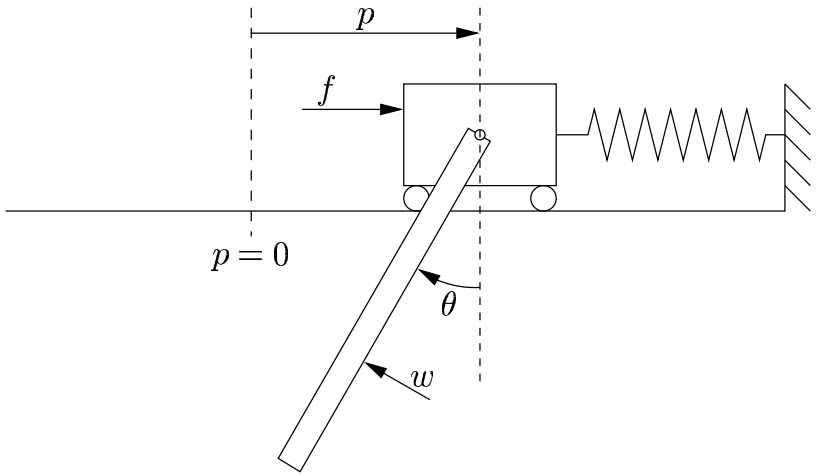

Output: $y = \begin{bmatrix} p \\ \theta \end{bmatrix} = \begin{bmatrix} \text{(cart position)} \\ \text{(pendulum angle)} \end{bmatrix}$

Control input: $u =$ (voltage to DC motor applying force f) $\in [-5, 5]$

Disturbance input: $w =$(force applied on pendulum)

- Construct LQG controller to regulate pend. angle despite small disturbances
- No quadratically stabilizing static anti-windup compensator exists.

Experiment: Spring-gantry system (II)

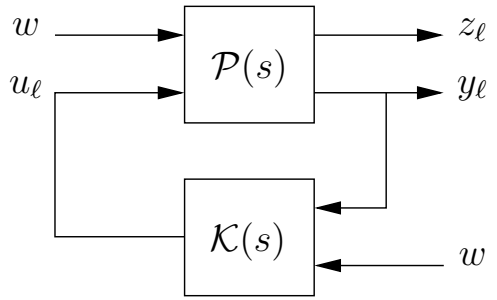

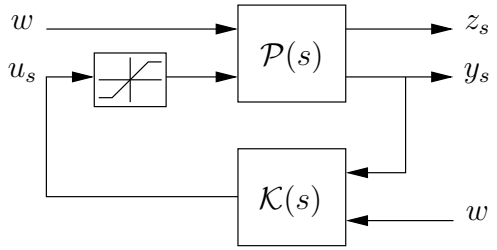

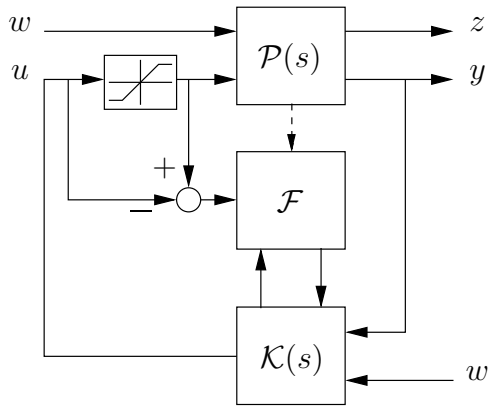

p (cart position)

θ (pend. angle)

u (Volts)

Simulation (thick)

Experiment (thin)

External, plant-order anti-windup designed for quadratic input/output performance.

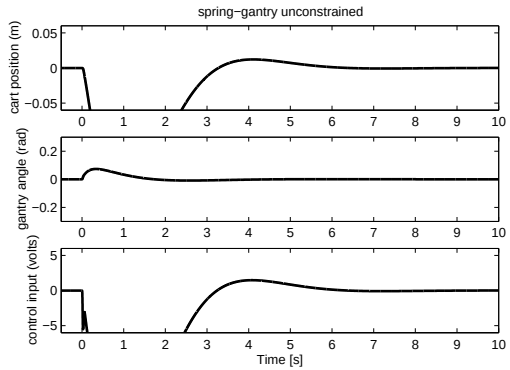

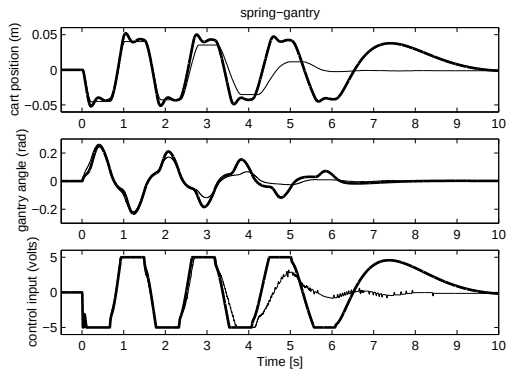

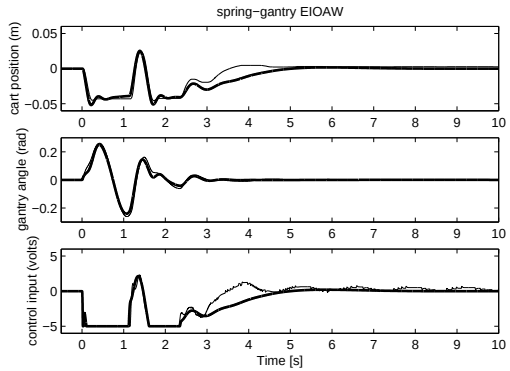

Conclusions

The following facts have been shown for both I/O and URR performance measures

▷ Convexity

- Fixed order anti-windup design

  $\equiv$ nonconvex problem in general (rank condition)

- Static and plant-order anti-windup design

  $\equiv$ convex problem formulation via LMIs

▷ Feasibility

- Plant-order anti-windup designs $\equiv$ always feasible
- Static anti-windup designs $\equiv$ existence of "quasi-common" quadratic Lyapunov functions and quadratic CLFs between plant, unconstrained closed-loop and open-loop systems

▷ Optimality (full-authority case only)

- Plant-order optimal anti-windup provides globally optimal performance level