Simple Adaptive Control without Passivity Assumptions and Experiments on Satellite Attitude Control

DEMETER Benchmark

Dimitri Peaucelle

Adrien Drouot

LAAS-CNRS

Université de Toulouse

Christelle Pittet

Jean Mignot

cnes

MILANO 2011 IFAC

IFAC World Congress / Milano / August 28 - September 2, 2011

- Considered problem:
  - Stabilization with simple adaptive control

$$\dot{K} = -Gyy^T\Gamma + \phi \ , \ \ u = Ky$$

  - For MIMO LTI systems

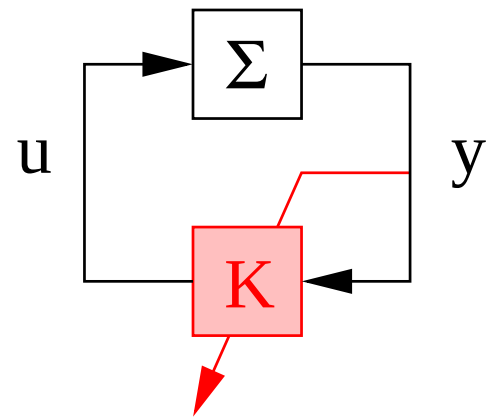

- Assumptions:
  - There exists a (given) stabilizing static output feedback

$$u = Fy$$

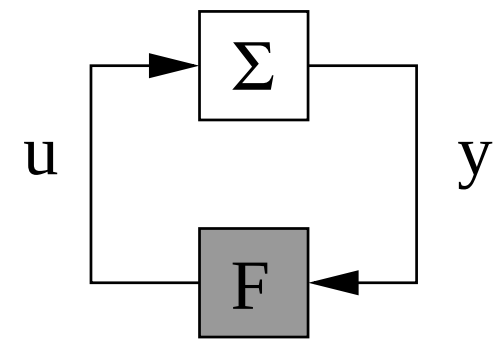

- Why simple adaptive control?
  - Expected to be more robust
  - No need for estimation $K \neq F(\hat{\theta})$

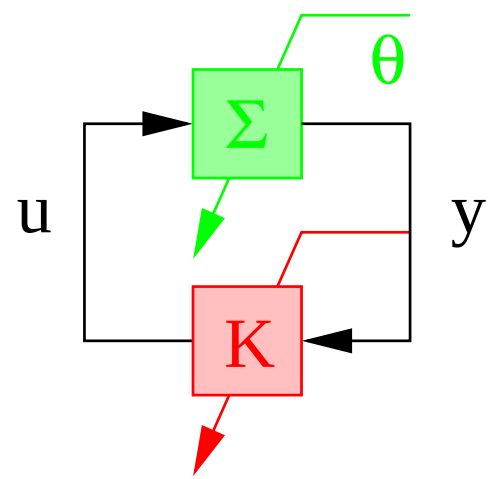

Outline

- Design of the adaptive law
  - Virtual feedthrough D & barrier function ϕ for bounding K
  - LMI based results

- Preliminary tests on a satellite Benchmark
  - Attitude control
  - Adaptive PD gains

Design of the adaptive law

- Passivity-Based Adaptive Control [Fradkov 1974, 2003]

  & Simple Adaptive Control [Kaufman, Barkana, Sobel 94]

- Let $\Sigma \sim (A, B, C, D)$ be a MIMO system with m inputs / $p \geq m$ outputs.
- If $\exists\ (G, F) \in (\mathrm{R}^{p \times m})^2$ such that the following system is passive

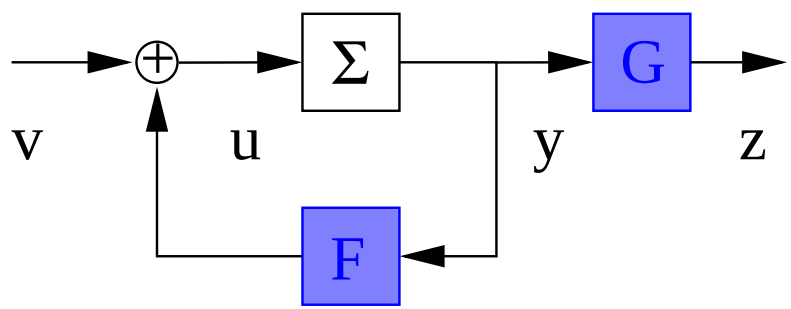

- then the following adaptive law stabilizes the system for all $\Gamma > \mathbf{0}$

$$\dot{K} = -G y y^T \Gamma \ , \ \ u = K y$$

Design of the adaptive law

- Underlying properties
- Passivity implies that for all $\Delta + \Delta^* \geq \mathbf{0}$ the following system is stable

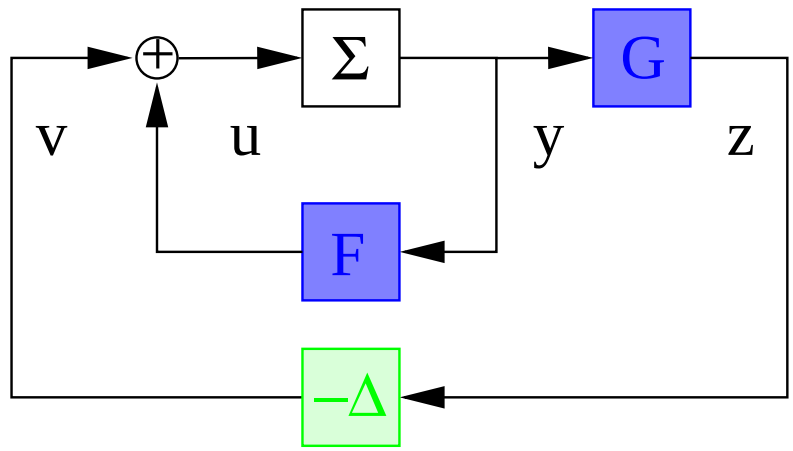

- *i.e.* all gains $(F - \Delta G)$ stabilize the system, for $\Delta + \Delta^* \geq \mathbf{0}$, possibly large
- $\dot{K} = -Gyy^T\Gamma$ "pushes" the gains in that direction until stability is reached

In practice: Need to limit growth of K. Modifications of adaptive law

$$\dot{K} = -Gyy^T\Gamma + \phi(K) \qquad (\textit{eg.}\ \ \phi(K) = -\sigma K)$$

Design of the adaptive law

- What if Σ is not passifiable by (G, F)?
- $\exists S$ a feedthrough (or Shunt) such that the following system is passive

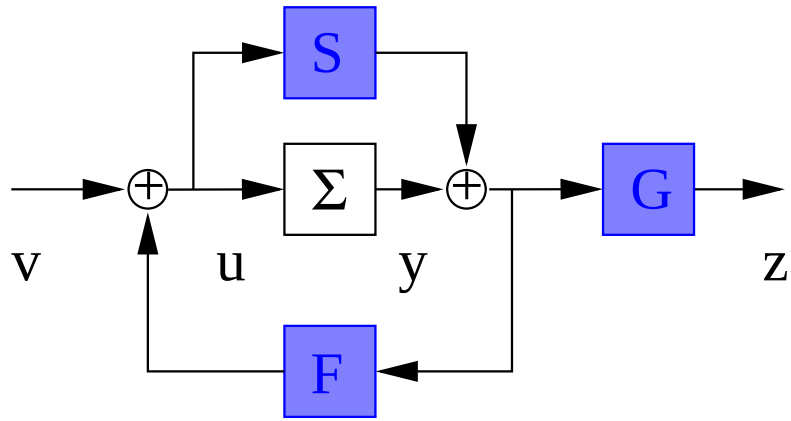

- then the adaptive law stabilizes the system $\Sigma + S$.

- In practice: S should be small for tracking issues ($u = K(y + Su)$)

- The actual gain is bounded

$$\hat{K} = K(1 - KS)^{-1}$$

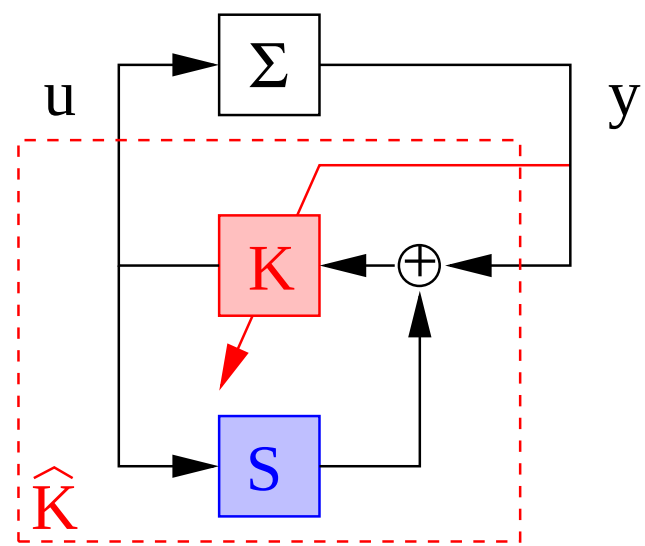

Design of the adaptive law

- Proposed result
- Stability proof based on a modified feedthrough scheme:

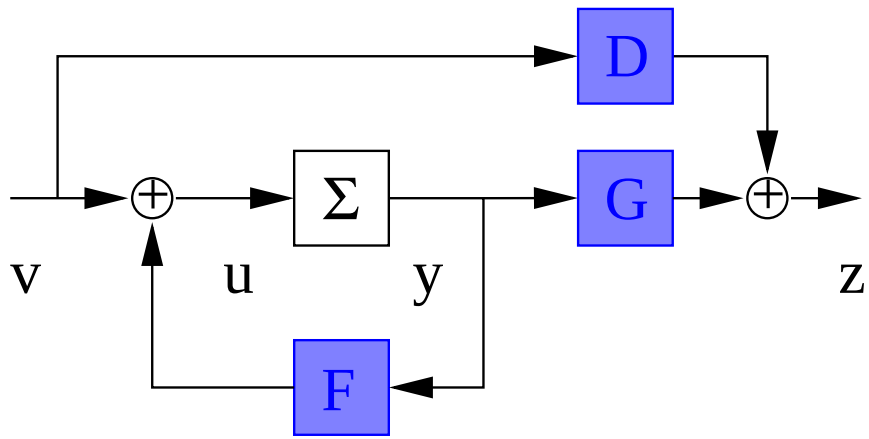

- K bounded thanks to a modification of the adaptive law:

$$\dot{K} = -Gyy^T\Gamma - \psi_D(K)\cdot(K - F) \ , \ \ u = Ky$$

- ψ_D is a deadzone: no modification when K is close to F

$$\psi_D(K) = 0 \ \ \text{if} \ \ ||K - F||_\bullet^2 \leq \nu$$

- ψ_D is a barrier: goes to infinity when K reaches border of accepted region

$$\psi_D(K) \to +\infty \ \ \text{if} \ \ ||K - F||_\bullet^2 \to \nu\beta \quad (\beta > 1)$$

Design of the adaptive law

- LMI-based design of $(G, D = \frac{\mu}{2}\mathbf{1}, \nu)$ assuming a given stabilizing F
- Step 1 (LMI): minimize μ such that following system is passive

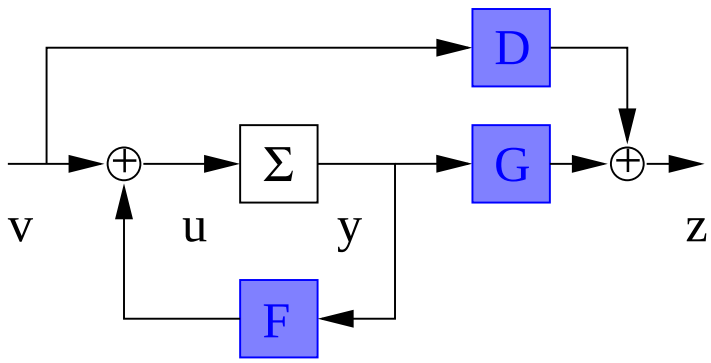

$$\begin{bmatrix} A^T(F)P + PA(F) & PB - C^TG^T \\ B^TP - GC & -\mu\mathbf{1} \end{bmatrix} < \mathbf{0}$$

- Step 2 (LMI): maximize ν, the size of admissible adaptive gains

$$\begin{bmatrix} T & (\hat{F} - F)^T \\ (\hat{F} - F) & \mu^{-1}\mathbf{1} \end{bmatrix} \geq \mathbf{0}, \quad \mathrm{Tr}(T) \leq \nu\mu,$$

$$Q > \mathbf{0}, \quad \begin{pmatrix} A^T(F)Q + QA(F) + \nu\mu\beta C^TC \\ +R + C^T(G^T(\hat{F} - F) + (\hat{F} - F)^TG)C \end{pmatrix} < \mathbf{0}.$$

$$\begin{bmatrix} R & QB - C^TG^T \\ B^TQ - GC & \mu\mathbf{1} \end{bmatrix} \geq \mathbf{0},$$

Design of the adaptive law

- LMI-based design of $(G, D = \frac{\mu}{2}\mathbf{1}, \nu)$ assuming a given stabilizing F
  - Procedure guaranteed to succeed if F stabilizes the system
  - K remains in a convex set around F (appreciated by engineers)
  - ν may be small, *i.e.* small admissible adaptation ($K \simeq F$)
  - LMI results can be easily extended to uncertain systems

    $\Rightarrow$ proof of robustness of adaptive control for given uncertainty set
  - In the robust case, step 2 is based on the existence of a PDSOF $\hat{F}(\theta)$

    Compared to $\hat{F}(\theta)$, the adaptive gain K needs not the estimation of θ
  - Lyapunov function for global stability of PBAC

$$V(x, K) = x^T Q x + \mathrm{Tr}((K - \hat{F})\Gamma^{-1}(K - \hat{F})^T)$$

- DEMETER satellite attitude control

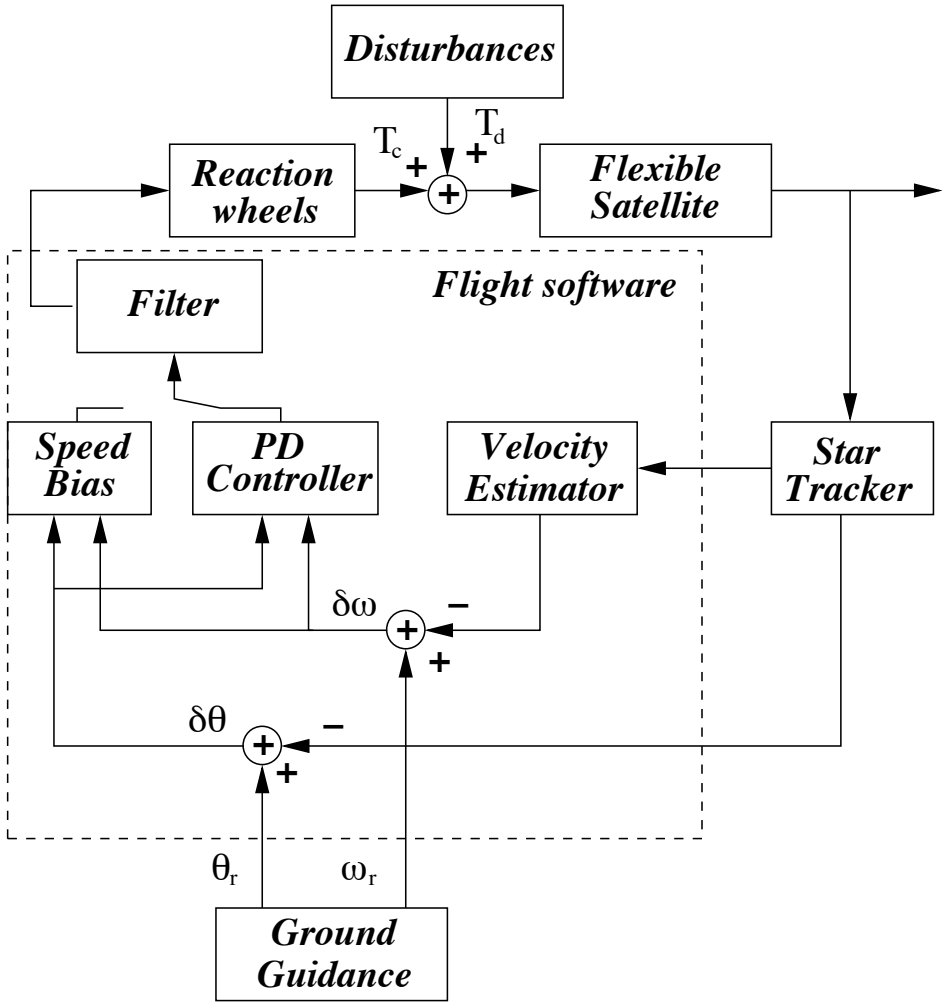

DEMETER satellite attitude control

- First experiment: adaptive tuning of PD gains of second axis with given filter
- Corresponds to OF for 2×1 system $\begin{bmatrix} 1 \\ \Sigma_{\text{estim}}(s) \end{bmatrix} \Sigma_{\text{sat},2}(s)\Sigma_{\text{filter},2}(s)$

$$\Sigma_{\text{estim}}(s) = \frac{s}{s+0.5}$$

$$\Sigma_{\text{sat},2}(s) = \frac{0.04736s^2+0.0006546s+0.2991}{s^2(s^2+0.01387s+6.338)}$$

$$\Sigma_{\text{filter},2}(s) = \frac{0.5411s^4-3.678s^3-4.99s^2-1.747s-0.1241}{s(0.25s^5+1.961s^4+5.094s^3+5.722s^2+3.068s+0.5784)}$$

- Given stabilizing SOF $F = \begin{bmatrix} 0.1 & 2 \end{bmatrix}$.

DEMETER satellite attitude control

- First experiment: adaptive tuning of PD gains of second axis with given filter
- Comparison of given SOF (dotted) and obtained PBAC

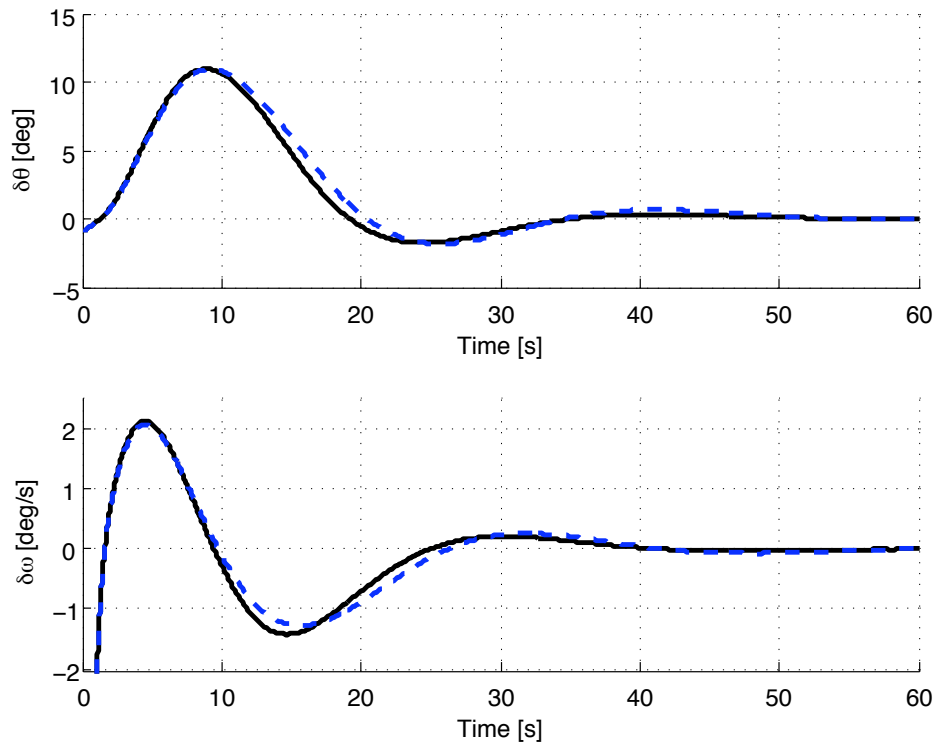

- Engineers have well chosen the PD and filter gains

DEMETER satellite attitude control

- Second experiment: same model but modified initial stabilizing F
- Modified SOF $F = \begin{bmatrix} 0.3 & 2 \end{bmatrix}$
- PBAC design gives

$$G = \begin{bmatrix} 28.13 & -165.56 \end{bmatrix} \ , \ \mu = 196.49 \ , \ \nu = 0.0244$$

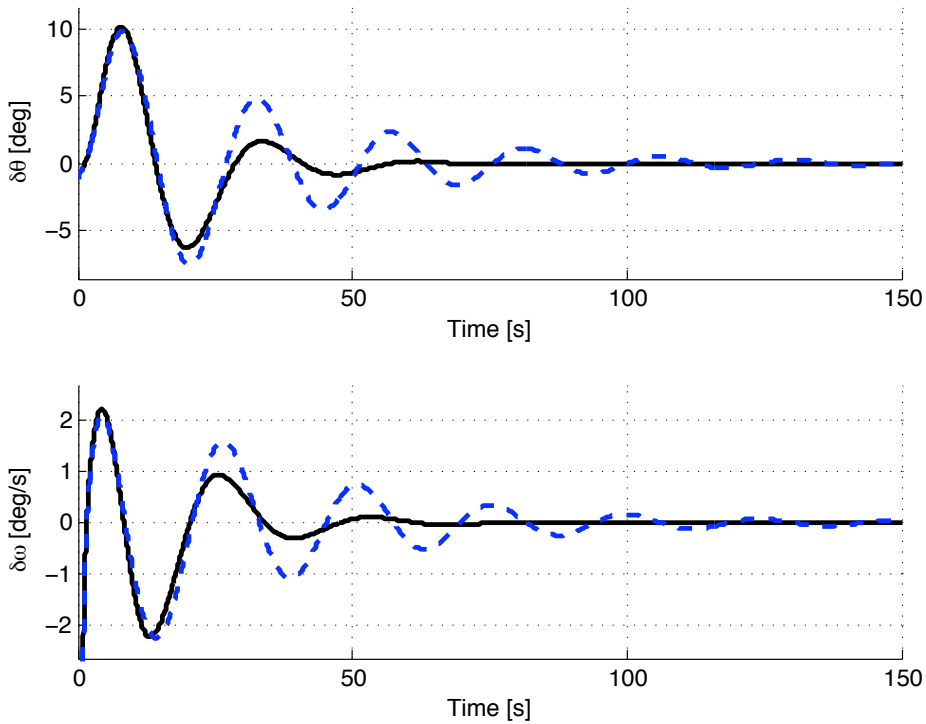

- Evolution of K during the simulation

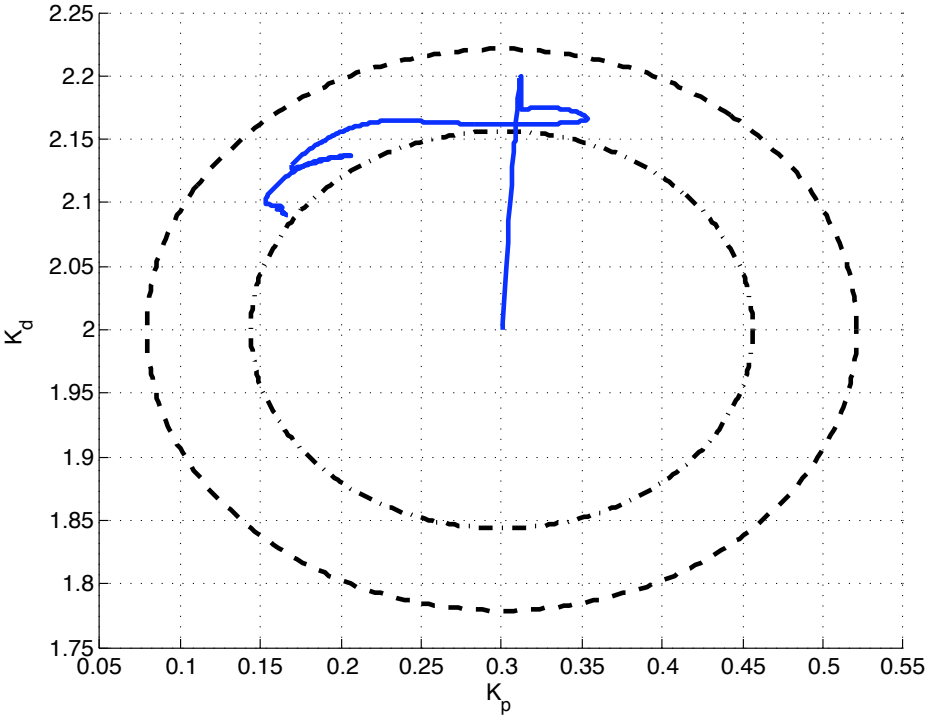

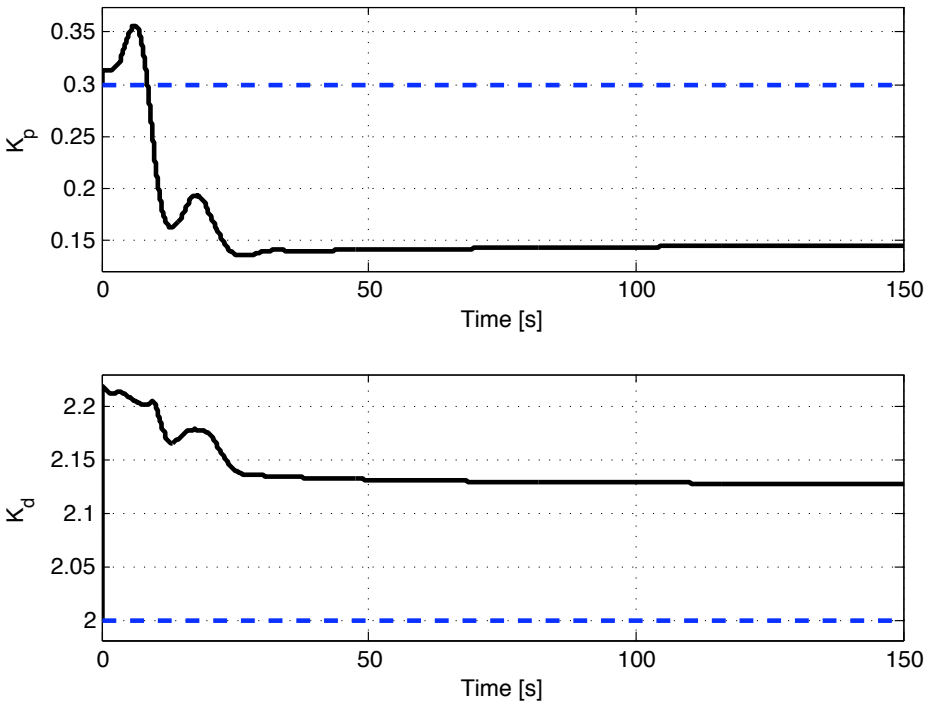

- Remains in largest circle (region such that $\|K - F\|_\bullet \leq \nu\beta$)
- When the system settles it converges in the smaller circle ($\|K - F\|_\bullet \leq \nu$)

DEMETER satellite attitude control

- Trird experiment: Same adaptive law but applied to first axis of satellite (robustness test)

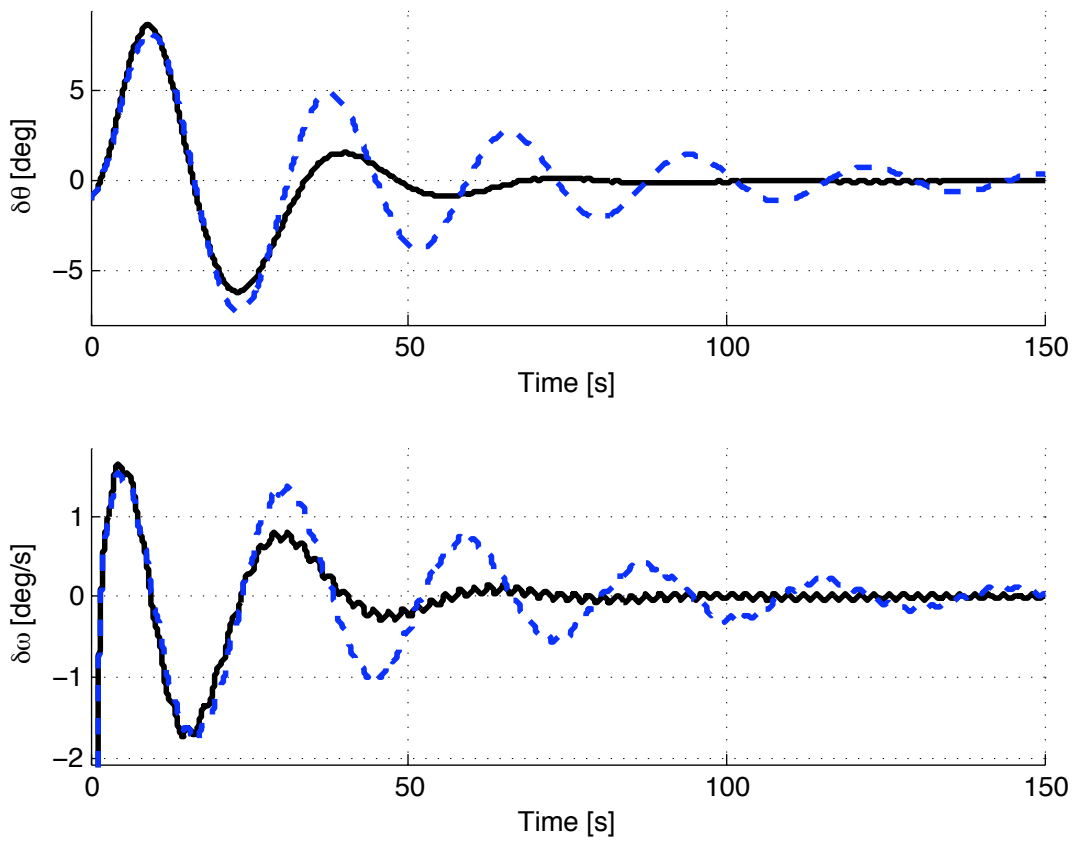

- PBAC not affected by the uncontrollable oscillating mode

Conclusions

- LMI-based method that guarantees stability of PBAC
  - Applies to any stabilizable LTI MIMO system
  - Adaptive gains remain bounded
  - Adaptive gains remain close to initial given values

- Prospectives
  - Enlarge admissible region for K: ellipsoids rather than discs [IFAC 2011]
  - Structured control (decentralized etc.)
  - Guaranteed robustness for time-varying uncertainties
  - Take advantage of flexibilities on G for engineering issues (saturations...)
  - ...