Towards robust control design for active flow control on wind turbine blades

first results based on numerical simulations

Dimitri Peaucelle

Caroline Braud, Emmanuel Guilmineau

SMARTEOLE Colloquium
Smart Rotors to Improve Wind Energy Efficiency and Sustainability
August 28-30, 2018 in Orléans, France

Active flow control on wind turbine blades session - 29 August - 12 :00-12 :25

Objectives

- Robust control tools for active feedback control of the air flow on turbine blades
  - Linear transfer functions representing approximately some dynamics
  - Heuristic (or better) design of low order controllers
  - Robust analysis of the feedback loop with respect to modeling uncertainties

- Cooperation with Caroline Braud & Emmanuel Guilmineau
  - Choice of a blade profile & actuators/sensors
  - Discussion about expected phenomena and objectives
  - 1st tests on numerical simulations of the flow
  - 2nd tests on a physical benchmark

Blade profile & sensors/actuators & numerical measurement

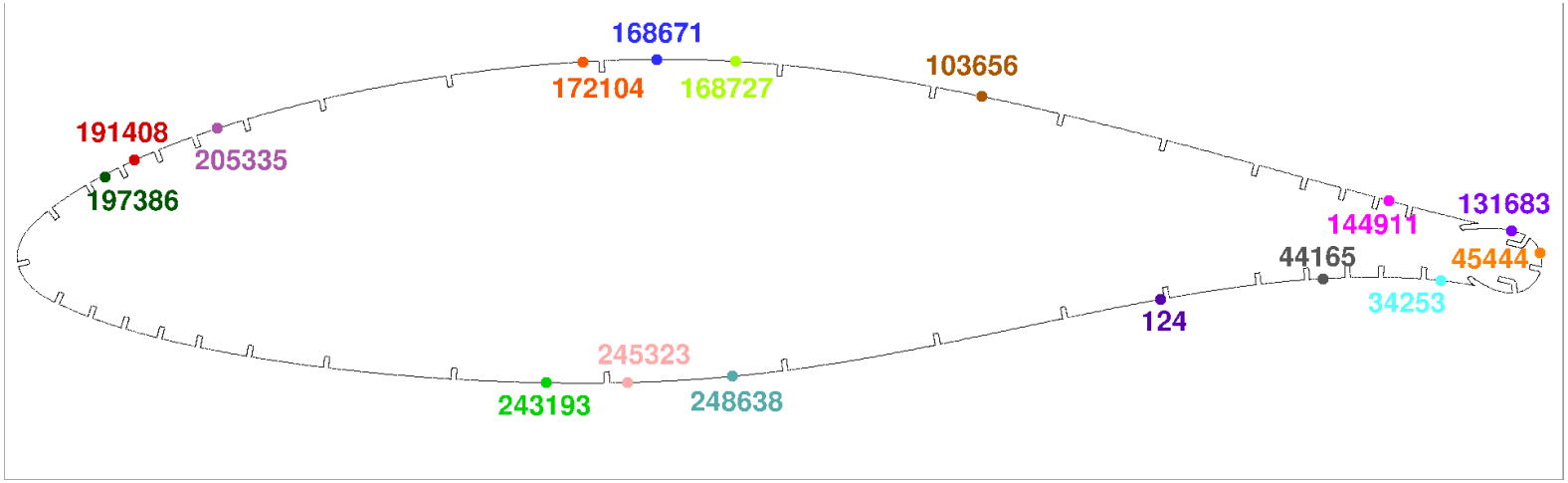

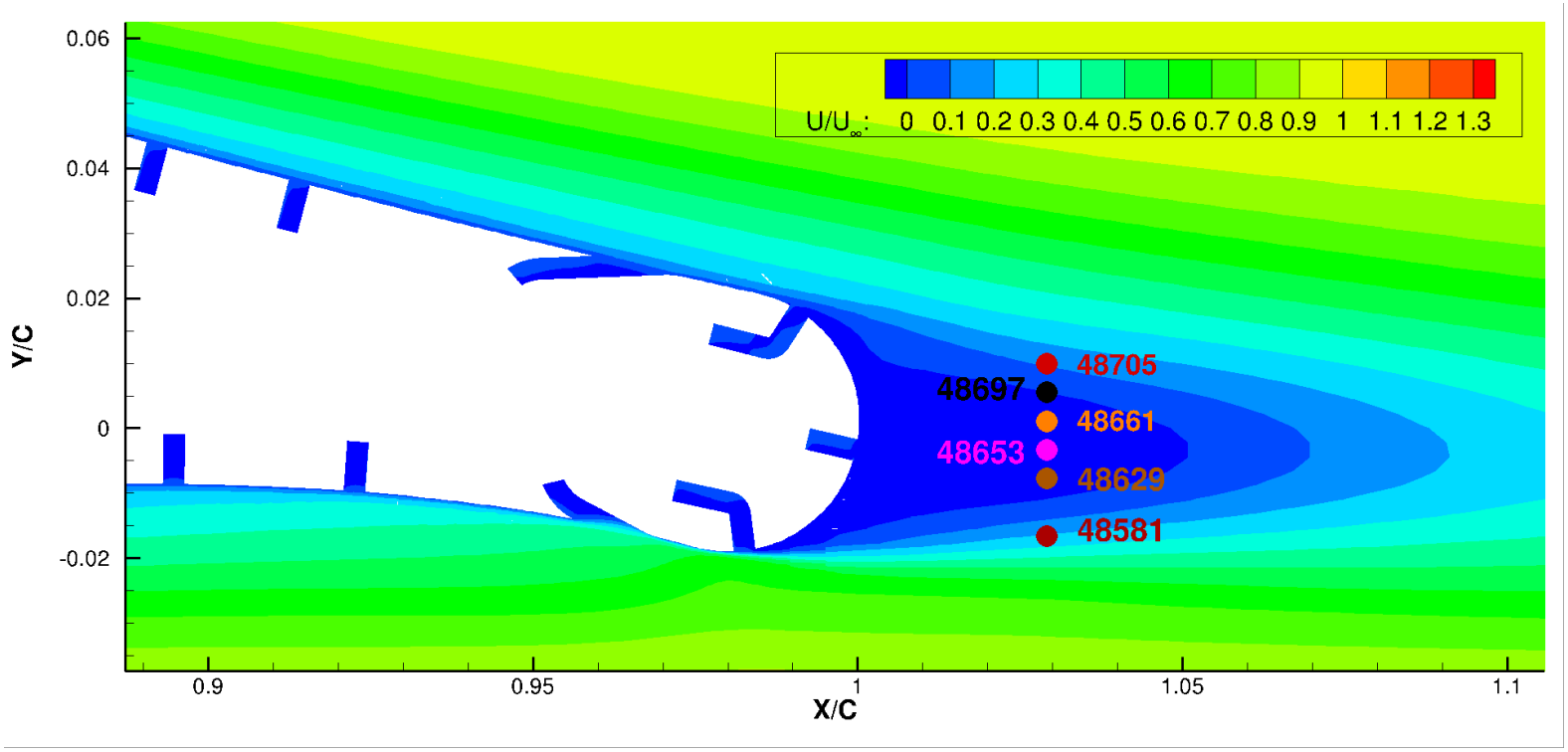

Numerical experiments without and with constant air blowing

$C_\mu = 0$

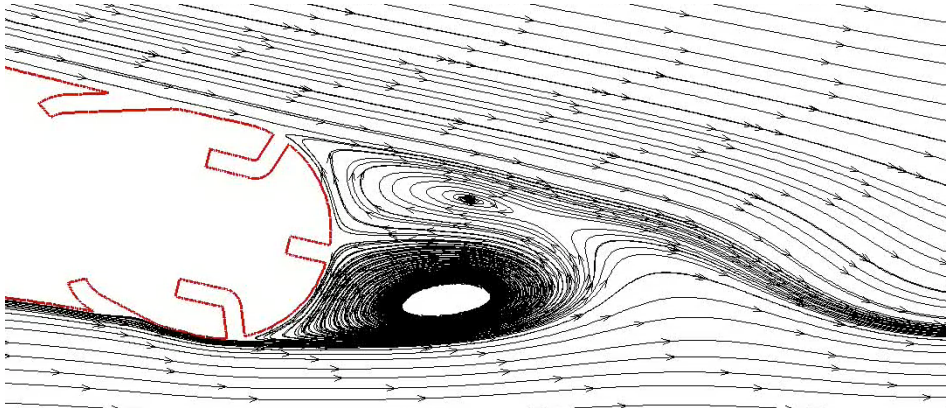

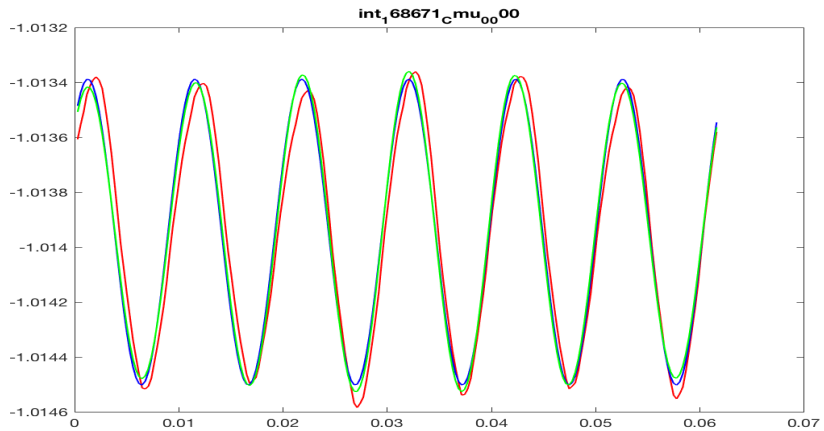

$f_{C_\mu=0} = 97.3408$Hz

$C_\mu = 0.055$

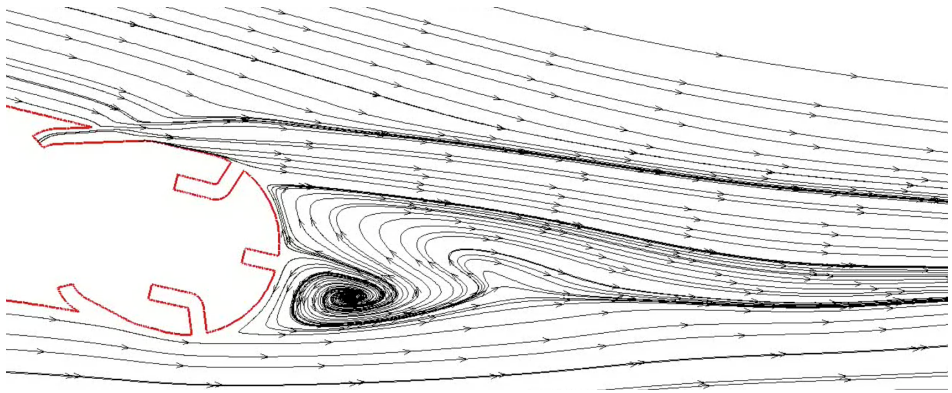

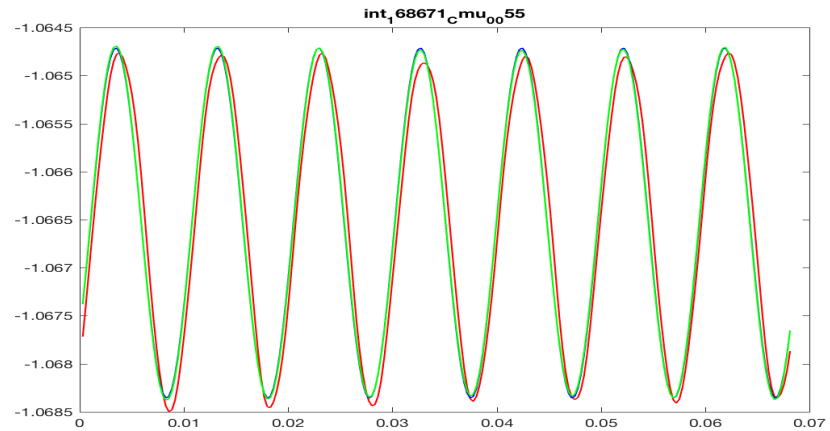

$f_{C_\mu=0.055} = 102.7487$Hz

Increased steady-state and amplitude

Proposed linear model

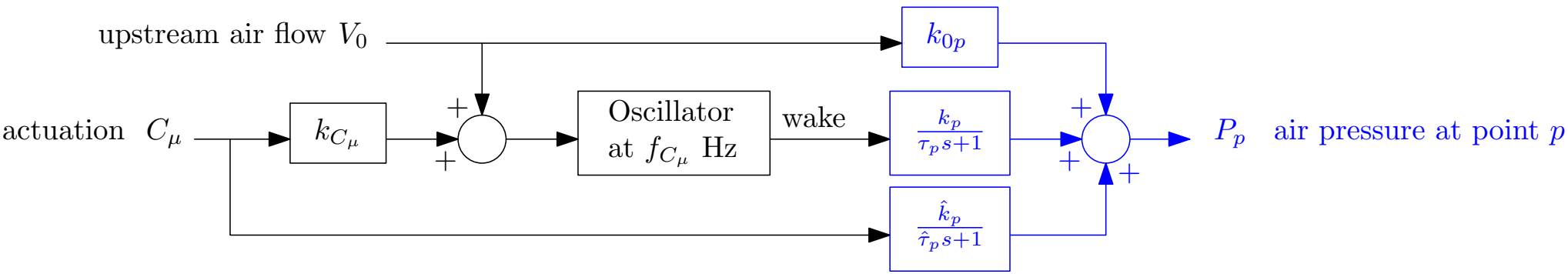

- Choice of 1st order transfer functions coherent with experiments by Braud&Jaunet
- Model takes into account only dynamics at low frequencies (from 0 to $f_{C_\mu} \simeq 100$Hz)
- Blue part is repeated for each points where air pressure is measured

- ▲ k_{C_μ} and k_{0p} identified using steady-state values
- ▲ τ_p identified using phase shift of sinusoids at frequency f_{C_μ}
- ▲ $\tau_p \simeq \hat{\tau}_p$ assumed similar because almost colocated
- ▲ k_p and $\hat{k}_p$ identified using amplitude of sinusoids at frequency f_{C_μ}

- ▼ All parameters should be considered as uncertain (modeling and identification errors)
- ▼ Model at one operating point (eg. one pitch angle $\alpha = 0$)

Linear parameter-varying (LPV) could be considered to go further

Proposed control problem

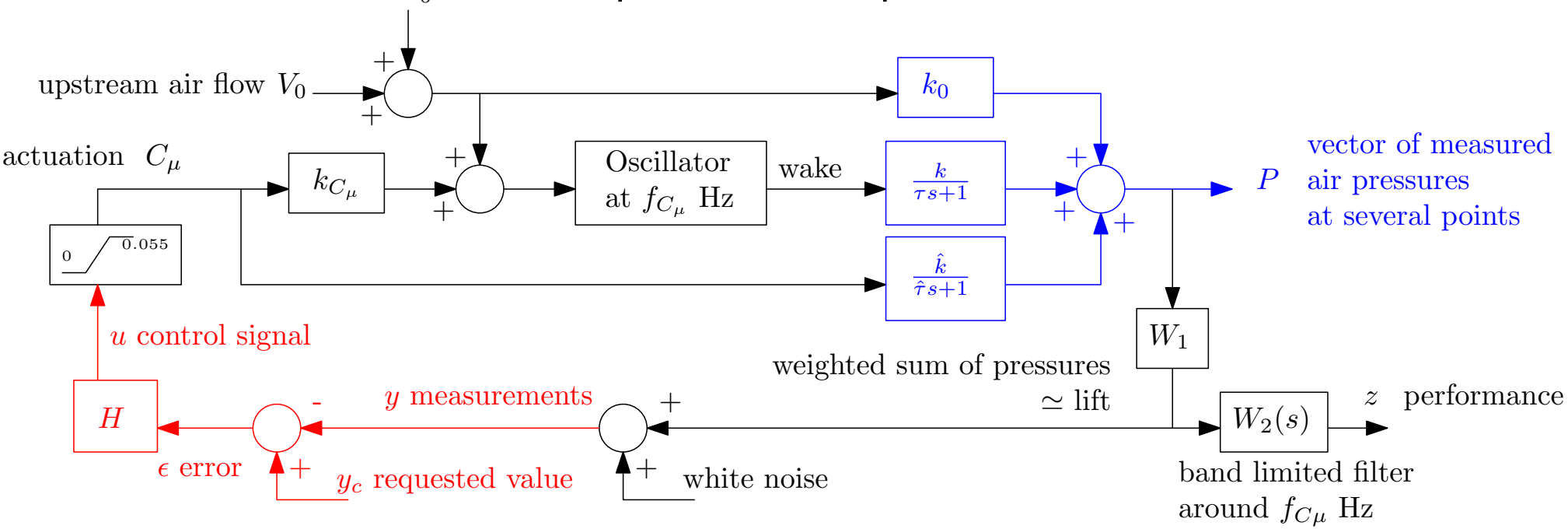

- Goal 1 : Make the system asymptotically stable (wake will converge to zero)
  - Could be achieved by appropriate feedback control : $u(t) = H(y(t))$
- Goal 2 : Keep lift at prescribed achievable level
  - Control should contain integrator
- Goal 3 : Attenuate influences of ΔV_0 and wake on lift
  - Can be evaluated by the H_∞ norm of the transfer from ΔV_0 to z
- Properties should be robust to modeling, uncertainties, noise & saturation

Choice of a simple control structure

- y : sum of 2 measures, upstream + close to wake $\quad y = P_{131683} + P_{168671}$

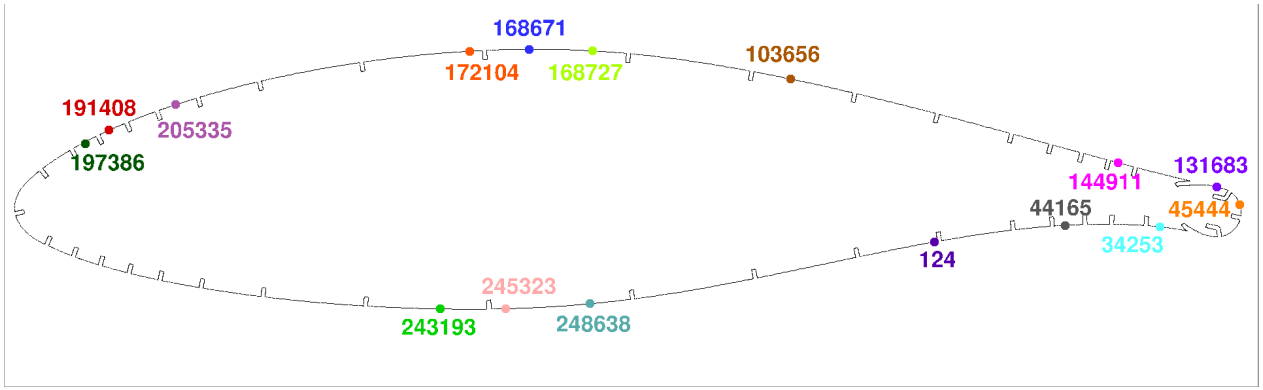

- upstream : contains mostly information about ΔV_0
- downstream : contains mostly information about wake

- PI control $u(t) = K_P \hat{\epsilon}(t) + K_I \int_0^\infty \hat{\epsilon}(\tau) d\tau$
- with Anti-Windup $\hat{\epsilon} = \epsilon - \dfrac{k_a}{\tau_a s + 1}(C_\mu - u)$

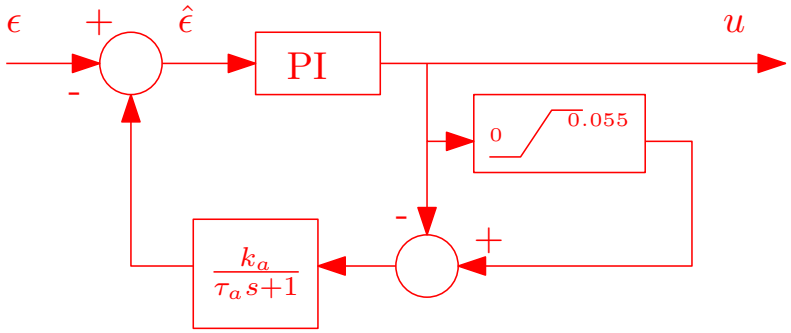

- Hand-tuned parameters

$K_p = 10^{-2}, K_I = -200, k_a = 10, \tau_a = 10^{-5}$

Open loop simulations with linear model

- OFF/ON actuator $C_\mu(t \in [0\,,\,0.25]) = 0 \quad C_\mu(t \in [0.25\,,\,0.5]) = 0.055$
- ΔV_0 periodic positive and negative steps (5% variation of V_0)

$P_p(t)$

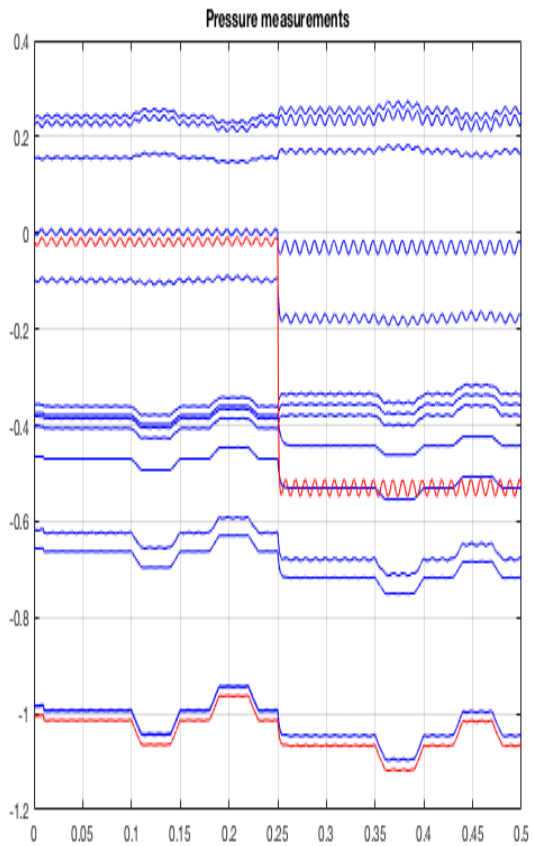

$y(t)$

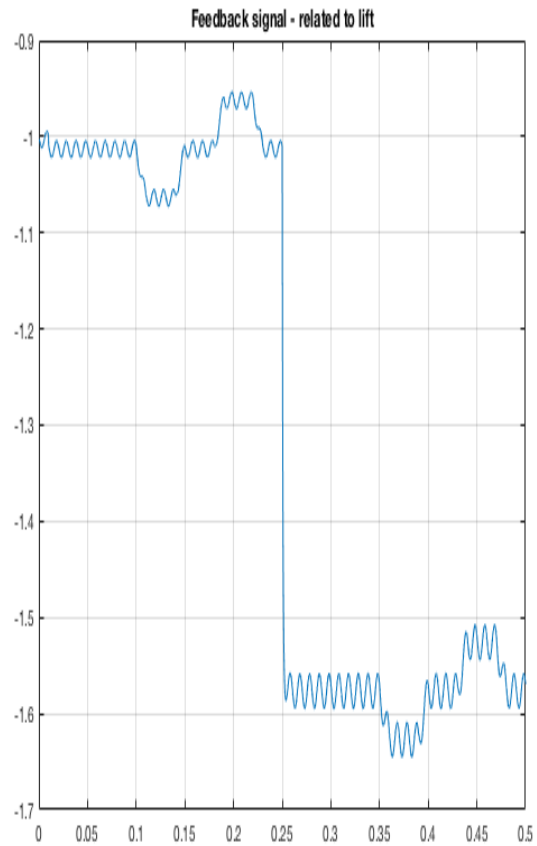

wake

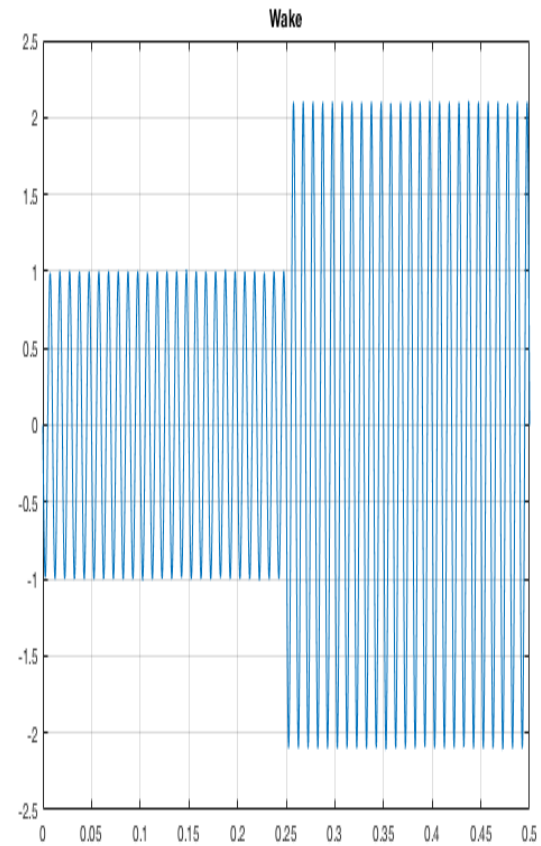

Closed loop simulations with linear model

- Requested 'lift' $y_c(t \in [0\,,\,0.25]) = -1.04 \quad y_c(t \in [0.25\,,\,0.5]) = -1.46$
- Same ΔV_0, noise=0

$u(t)$

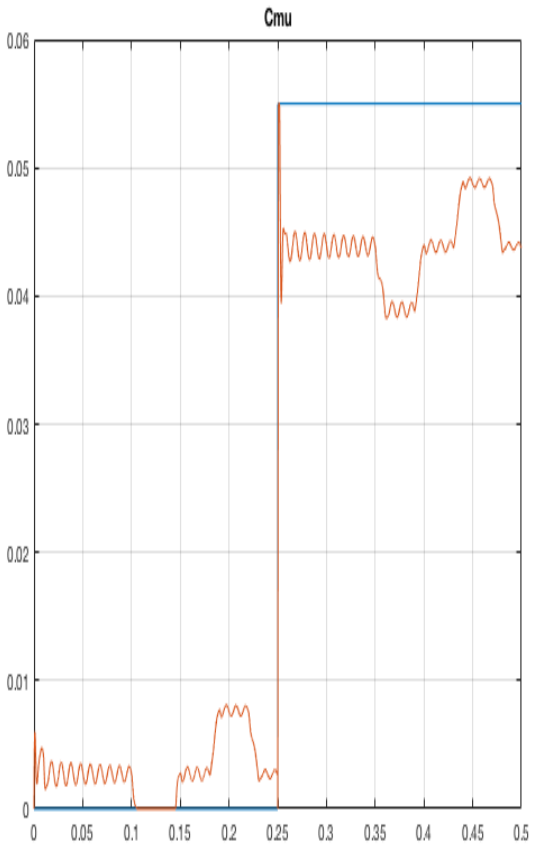

$y(t)$

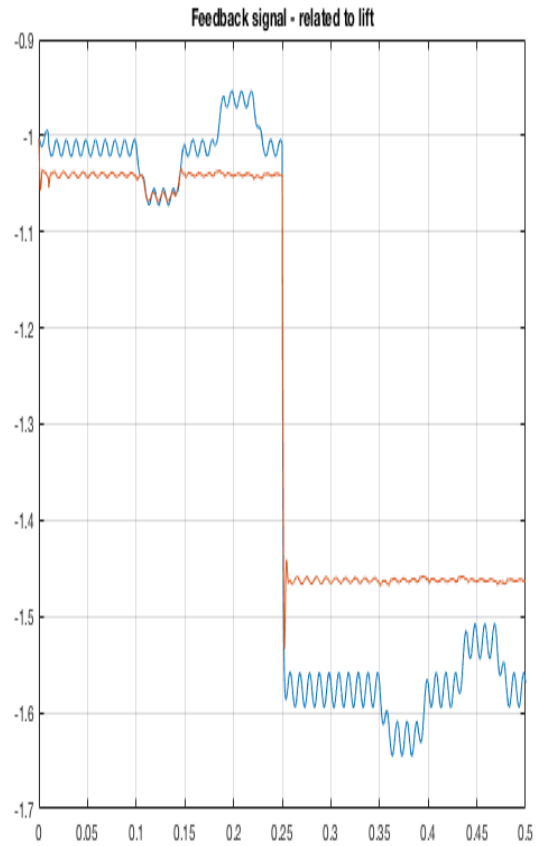

wake

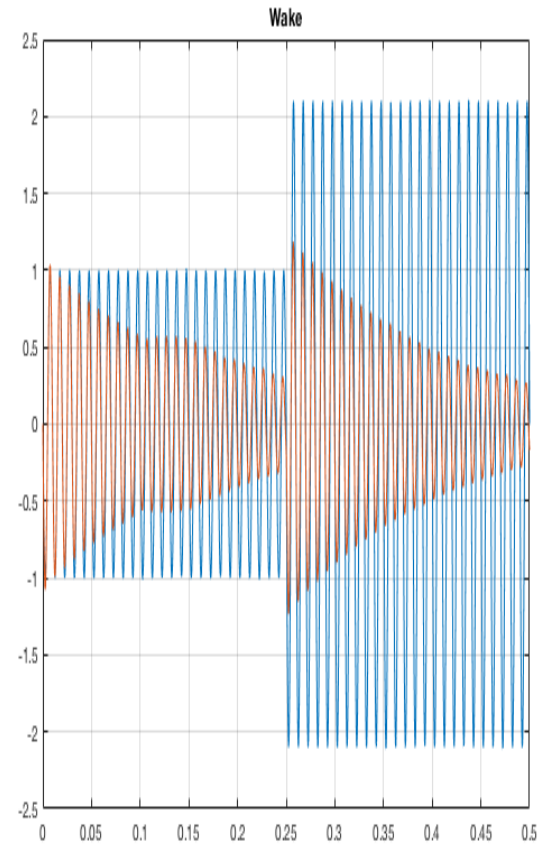

Closed loop simulations with linear model

- Requested 'lift' $y_c(t \in [0\,,\,0.25]) = -1.04 \quad y_c(t \in [0.25\,,\,0.5]) = -1.46$
- Same ΔV_0, noise $\neq 0$

$u(t)$

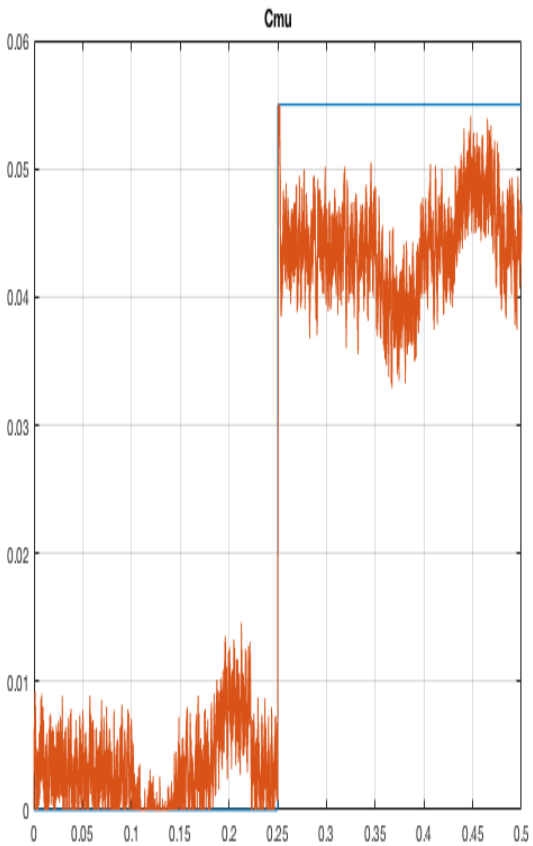

$y(t)$

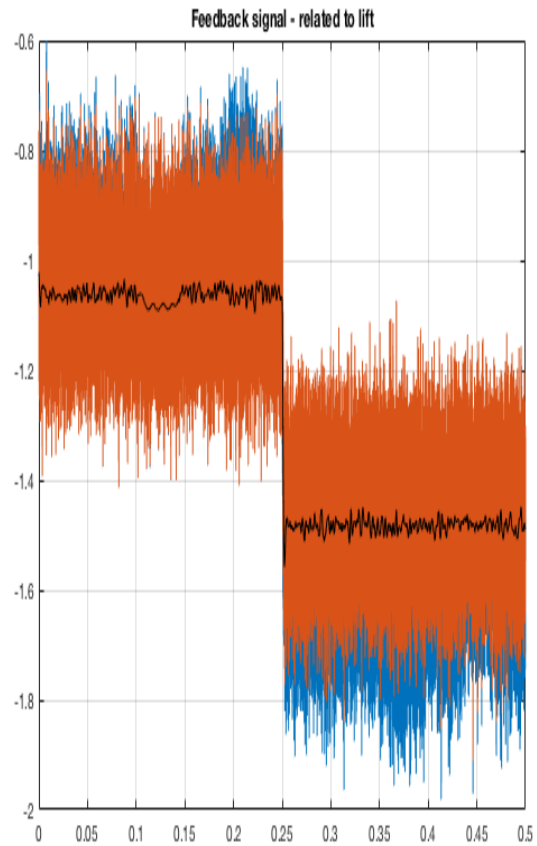

wake

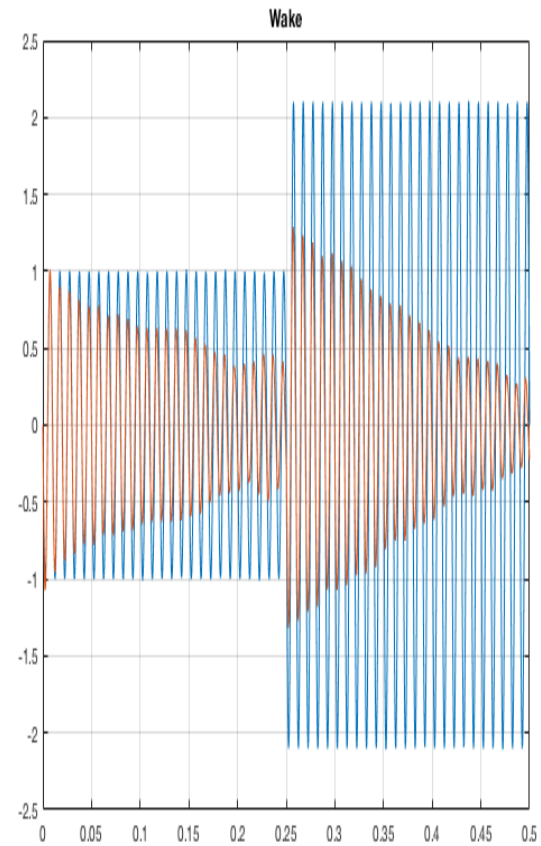

Robustness of closed-loop

- γ = H_∞ performance of transfert $\Delta V_0 \to z$

- (A) If no uncertainties on parameters
- (B) Constant uncertainties : 10% on τ, 5% on $f_{C\mu}$, 20% on k_{C_μ}
- (C) Time varying uncertainties : 10% on τ, 5% on $f_{C\mu}$, 20% on k_{C_μ}

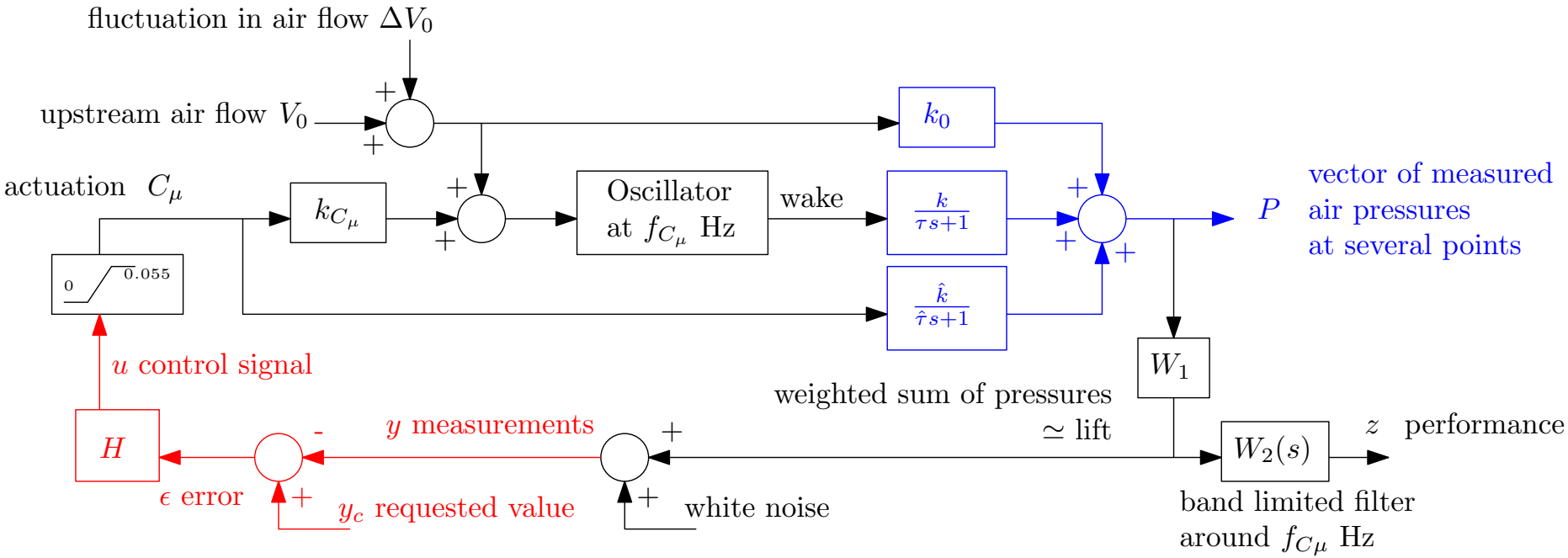

$$\gamma(A) = 0.4153 \quad , \quad \gamma(B) \leq 0.4279 \quad , \quad \gamma(C) \leq 0.4563$$

- Values computed using R-Romuloc toolbox

Conclusions

- ▲ Simple control strategy based on existing actuators/sensors
- ▲ Data obtained from numerical experiments
- ▲ Encouraging simulations and robustness assessments

- ▼ Need for validation on closed-loop numerical experiments
- ▼ Need for validation on physical experiments
- ▼ Physical sensors may not be efficient enough (noise + ?)
- ▼ Actuators may not be efficient enough (saturation + PWM + ?)

- ■ Easily hand-tuned control
- ● Structured control tools (Hifoo, hinfstruct,...) could do better

- ■ Current study for one operating point ($\alpha = 0$, one wind speed, etc.)
- ● Need for parameter-varying control, or adaptive control