Input allocation using dynamics: theory and applications

Luca Zaccarian

LAAS-CNRS and University of Trento

Thanks to S. Galeani, A. Serrani, G. De Tommasi,
D. Arzelier, S. Hirche, D. Peaucelle, A. Pironti, V. Mulone,
C. Pittet, E. Vitale, L. Boncagni, G. Granucci, G. Calabro', F. Rimini,
F. Mecocci, G. Varano, J.F. Tregouet, M. Sassano, S. Erhart, M. Cocetti, A. Zambelli

Cambridge, October 8, 2015

Outline

Weak and strong input redundancy in linear plants

▷ A linear plant with *weak* or *strong* input redundancy

- **Strong**: some nonzero time-varying inputs produce zero <u>transients</u>
- **Weak**: some nonzero converging inputs produce zero <u>steady-state</u>

$$\begin{aligned} \dot{x} &= Ax + Bu + B_d d \\ y &= Cx + Du + D_d d, \end{aligned}$$

Def'n: A plant is input-redundant if one of the following two conditions is satisfied

- it is *strongly input-redundant* from u if it satisfies $\mathrm{Ker}\left(\left[\begin{smallmatrix} B \\ D \end{smallmatrix}\right]\right) \neq \emptyset$; denote

$$B_\perp \text{ such that } \mathrm{Im}(B_\perp) = \mathrm{Ker}\left(\left[\begin{smallmatrix} B \\ D \end{smallmatrix}\right]\right);$$

- it is *weakly input-redundant* from u to y if $P^\star := \lim_{s\to 0}(C(sI-A)^{-1}B+D)$ is finite and satisfies $\mathrm{Ker}(P^\star) \neq \emptyset$; denote

$$B_\perp \text{ such that } \mathrm{Im}(B_\perp) = \mathrm{Ker}(P^\star).$$

Allocator dynamics may only act in the $B_\perp$ directions

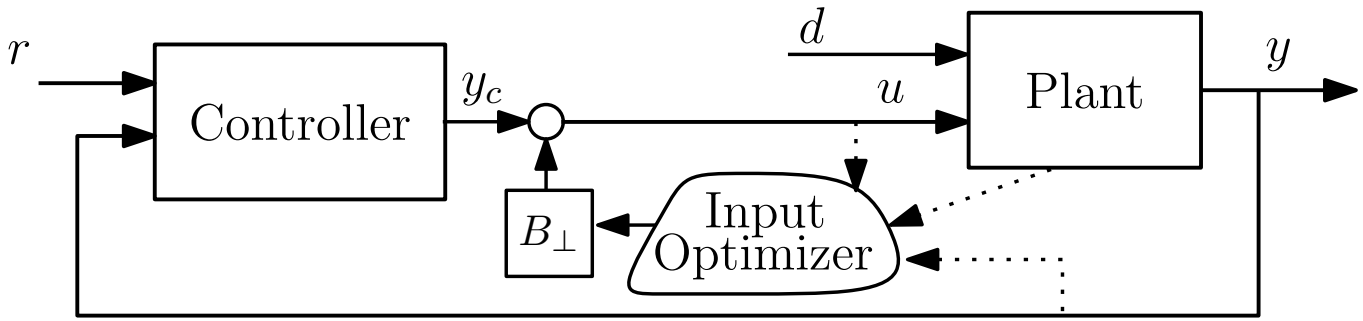

▷ Assume that a controller **has been designed** disregarding input redundancy to obtain a **desirable plant output response** y

$$\begin{aligned} \dot{x}_c &= A_c x_c + B_c y + B_r r \\ y_c &= C_c x_c + D_c y + D_r r, \end{aligned}$$

▷ Design an input allocator which
- exploits strong redundancy to get *fast reallocation* during transients
- exploits weak redundancy to get *slow reallocation* at the steady-state

▷ The allocator measures controller output y_c and adds compensating signal
- Choose that signal as $B_\perp w$ for some w
- Pick w as the output of a pool of integrators (dynamic solution)

Linear dynamic allocation minimizes $J=(u-u_O)^T\bar{W}(u-u_O)$

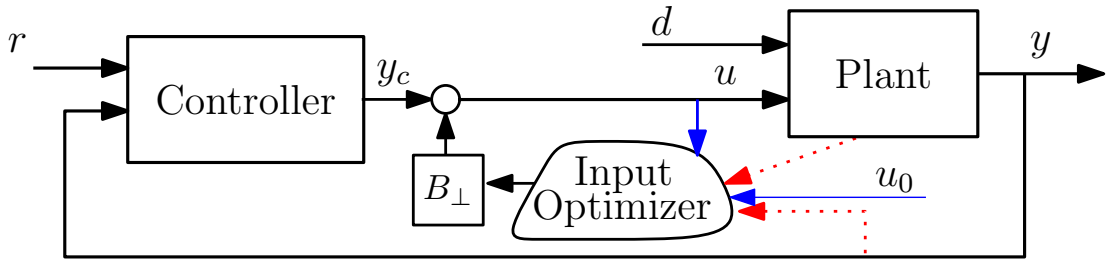

▷ Linear solution only relying on the knowledge of the controller output y_c

$$\begin{aligned}\dot{w} &= -2\rho K B_\perp^T \bar{W}(u-u_0) = -\rho K B_\perp^T \nabla J \\ u &= y_c + B_\perp w,\end{aligned}$$

Th'm: With *strong redundancy*, if $K>0$ and $B_\perp^T\bar{W}B_\perp>0$ then internal stability and output response y unaffected by allocator

Th'm: With *weak redundancy*, if $K>0$ and $B_\perp^T\bar{W}B_\perp>0$ then internal stability and steady-state output response y unaffected by allocator for small enough ρ

▷ Role of $\bar{W}$: assign the steady-state plant input, solution to:

$$\min_w J(u) := (u-u_0)^T\bar{W}(u-u_0), \quad \text{subject to: } u = y_c^\star + B_\perp w,$$

corresponding to $u^\star = u_0 + \left(I - B_\perp(B_\perp^T\bar{W}B_\perp)^{-1}B_\perp^T\bar{W}\right)y_c^\star$.

▷ u_0 is a useful drift term (e.g., center of saturation range)

Linear dynamic allocation minimizes $J=(u-u_O)^T\bar{W}(u-u_O)$

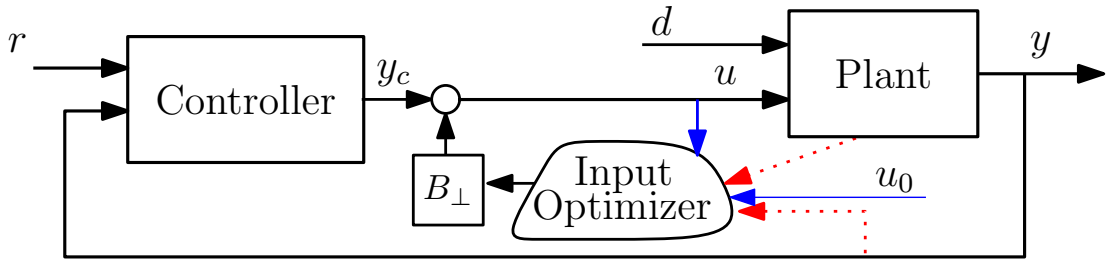

▷ Linear solution only relying on the knowledge of the controller output y_c

$$\begin{aligned}\dot{w} &= -2\rho K B_\perp^T \bar{W}(u-u_0) = -\rho K B_\perp^T \nabla J \\ u &= y_c + B_\perp w,\end{aligned}$$

Th'm: With *strong redundancy*, if $K>0$ and $B_\perp^T\bar{W}B_\perp>0$ then internal stability and output response y unaffected by allocator

Th'm: With *weak redundancy*, if $K>0$ and $B_\perp^T\bar{W}B_\perp>0$ then internal stability and steady-state output response y unaffected by allocator for small enough ρ

▷ Role of K diagonal: promote/penalize different redundant directions while not affecting the steady-state input:

$$u^\star = u_0 + \left(I - B_\perp(B_\perp^T\bar{W}B_\perp)^{-1}B_\perp^T\bar{W}\right)y_c^\star$$

▷ Role of $\rho\in\mathbb{R}_{>0}$ is to assign any (arbitrily fast or slow) allocation speed

Randomly generated academic example (strong)

▷ Plant is strongly input redundant (one direction), controller is LQG

$$\left[\begin{array}{c|c} A & B \\ \hline C & D \end{array}\right] = \left[\begin{array}{cc|ccc} -0.157 & -0.094 & 0.87 & 0.253 & 0.743 \\ -0.416 & -0.45 & 0.39 & 0.354 & 0.65 \\ \hline 0 & 1 & 0 & 0 & 0 \end{array}\right].$$

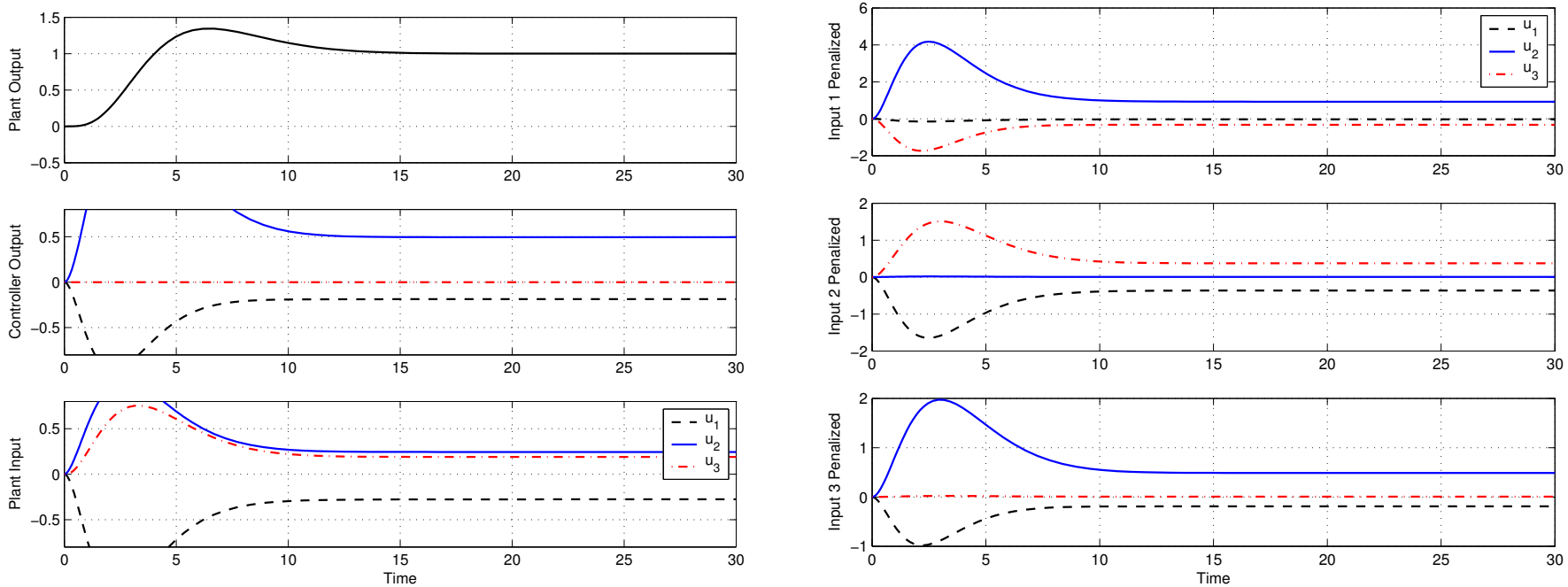

$K = 10I$ and $\bar{W} = I$

$\bar{W} = \begin{bmatrix} 100 & 0 & 0 \\ 0 & 1 & 0 \\ 0 & 0 & 1 \end{bmatrix}$, $\bar{W} = \begin{bmatrix} 1 & 0 & 0 \\ 0 & 100 & 0 \\ 0 & 0 & 1 \end{bmatrix}$, and $\bar{W} = \begin{bmatrix} 1 & 0 & 0 \\ 0 & 1 & 0 \\ 0 & 0 & 100 \end{bmatrix}$

Randomly generated academic example (strong)

▷ Plant is strongly input redundant (one direction), controller is LQG

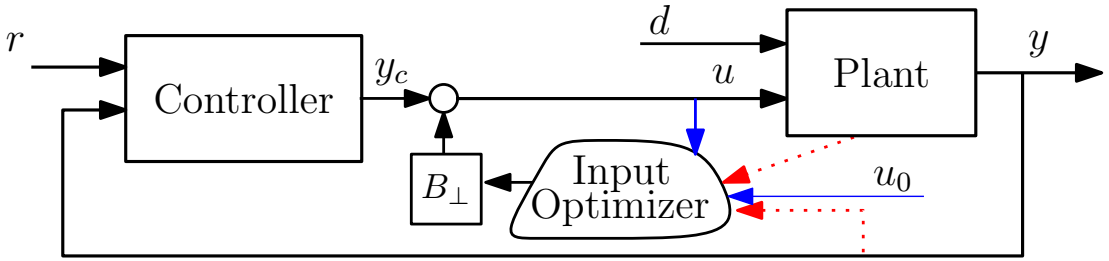

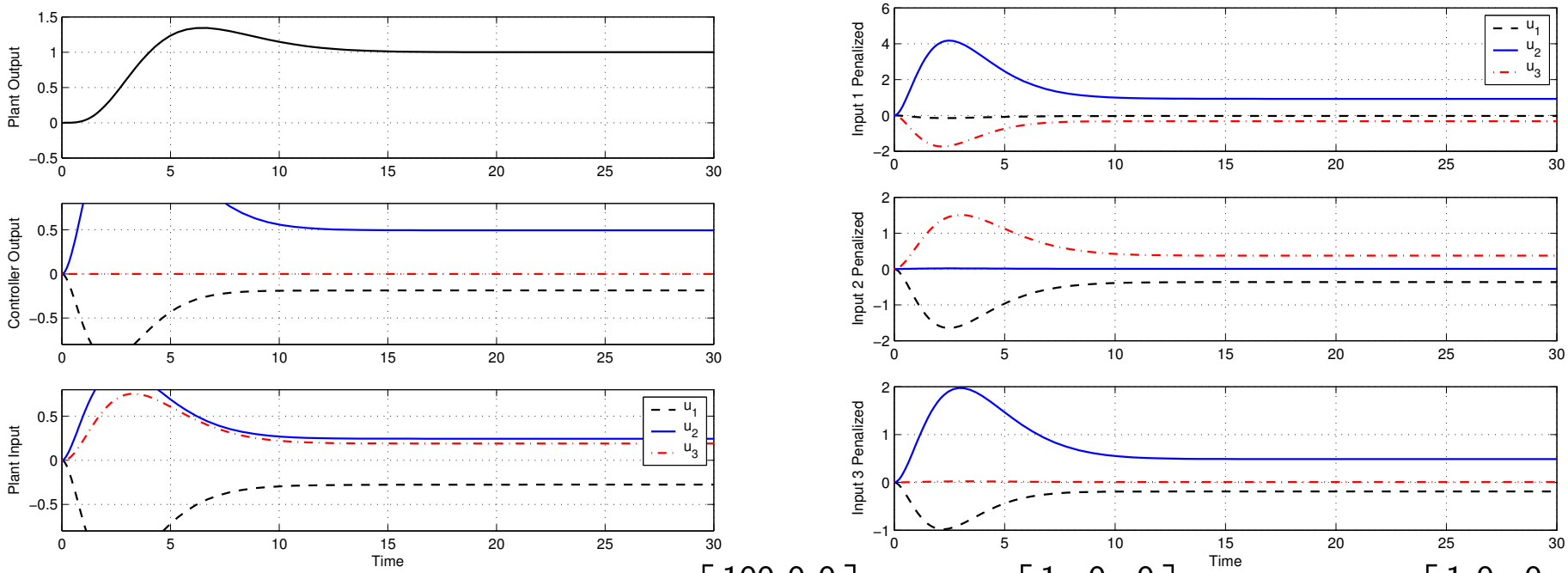

$K = 10I$ and $\bar{W} = I$ $\quad$ $\bar{W} = \begin{bmatrix} 100 & 0 & 0 \\ 0 & 1 & 0 \\ 0 & 0 & 1 \end{bmatrix}$, $\bar{W} = \begin{bmatrix} 1 & 0 & 0 \\ 0 & 100 & 0 \\ 0 & 0 & 1 \end{bmatrix}$, and $\bar{W} = \begin{bmatrix} 1 & 0 & 0 \\ 0 & 1 & 0 \\ 0 & 0 & 100 \end{bmatrix}$

Randomly generated academic example (strong)

▷ Plant is strongly input redundant (one direction), controller is LQG

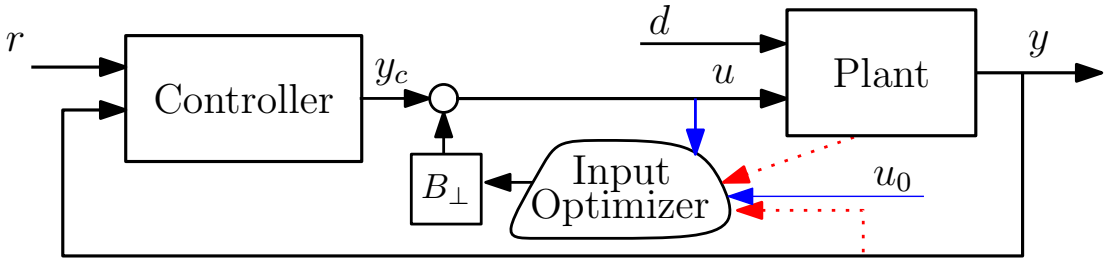

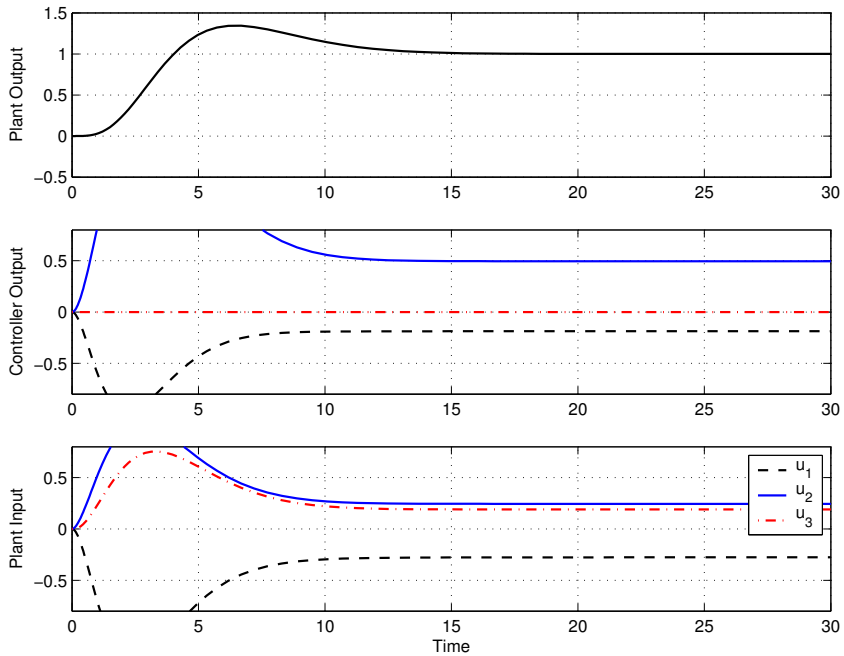

$K = 10I$ and $\bar{W} = I$

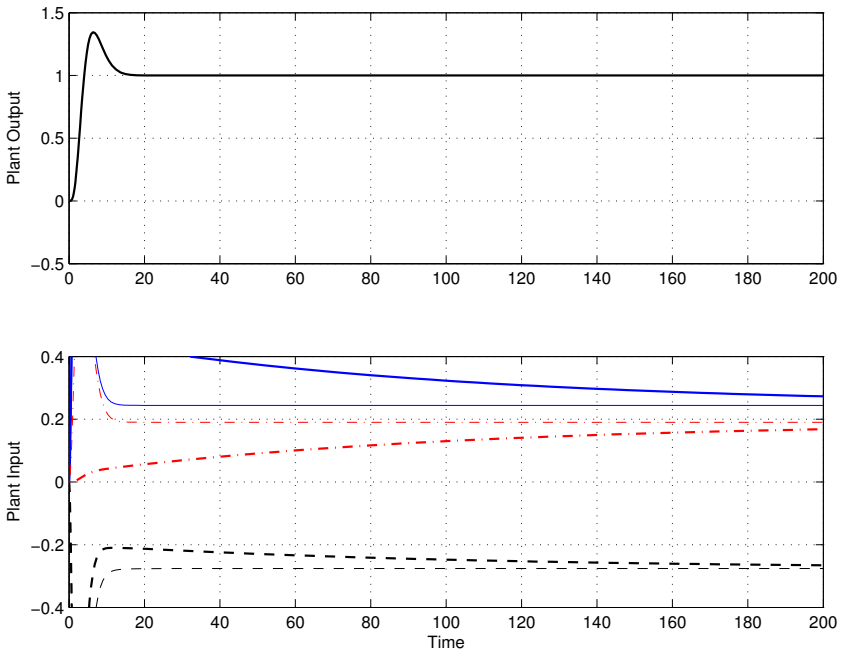

$K = 10$ (solid) and $K = 0.01$ (dash-dotted)

Randomly generated academic example (weak)

▷ Plant is weakly input redundant (two directions), controller is LQG

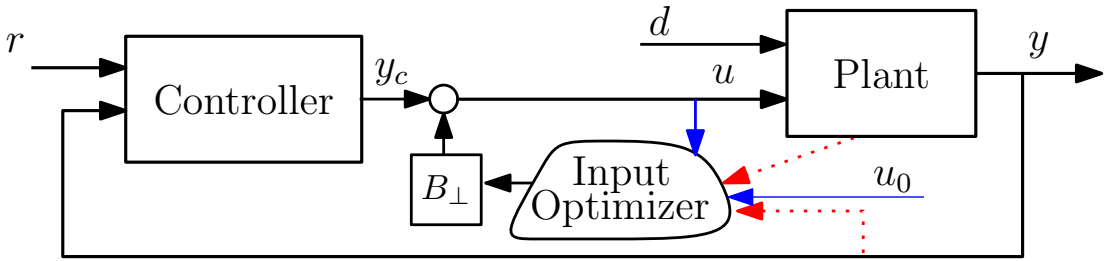

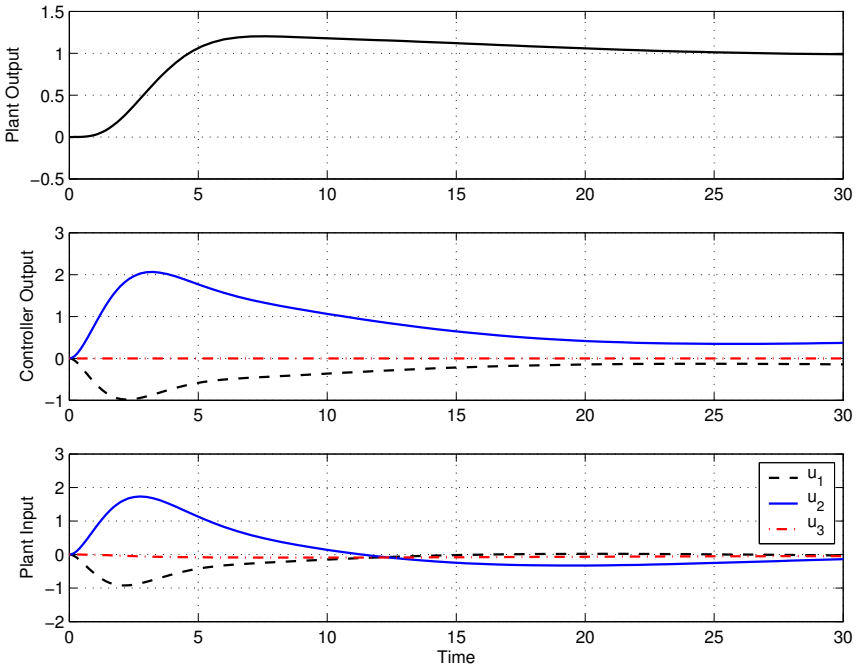

$\rho K = 0.1 I$ and $\bar{W} = I$: OK!

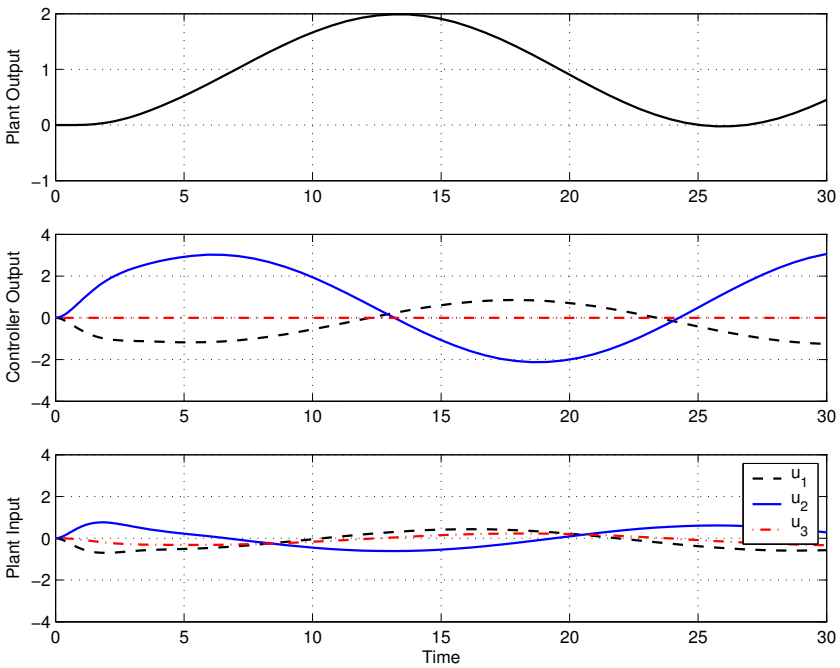

$\rho K = 1 I$ and $\bar{W} = I$: unstable!

Randomly generated academic example (weak)

▷ Plant is weakly input redundant (two directions), controller is LQG

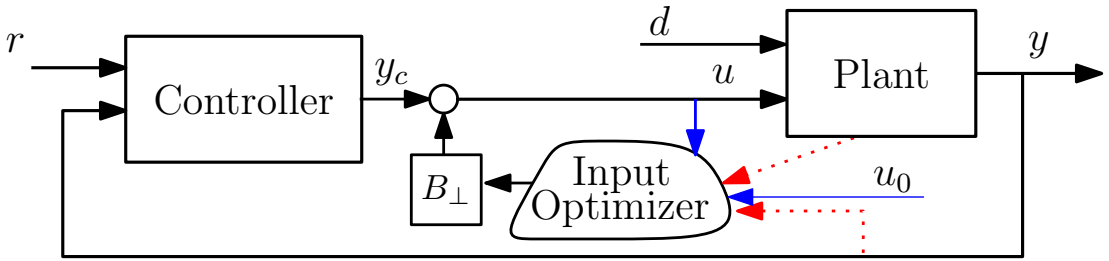

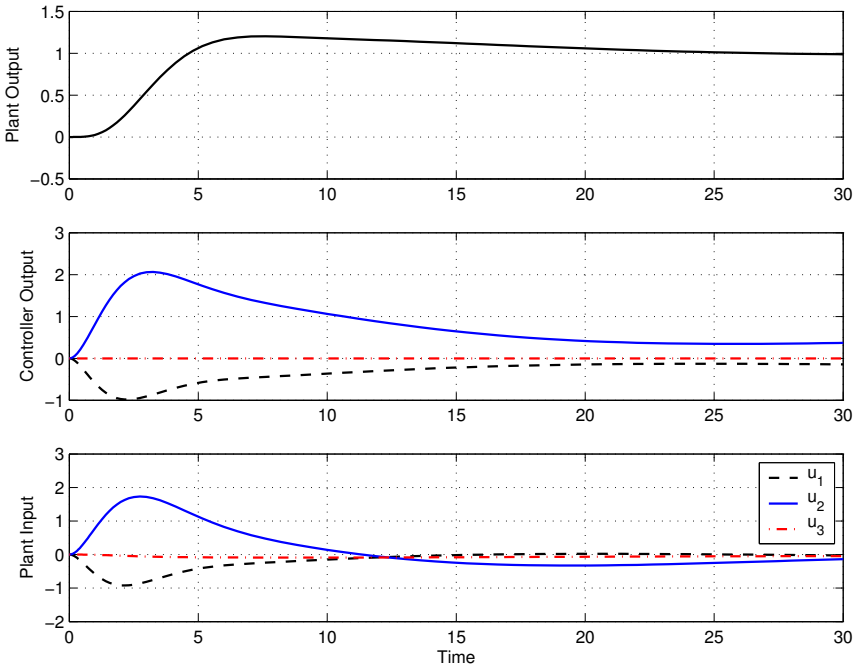

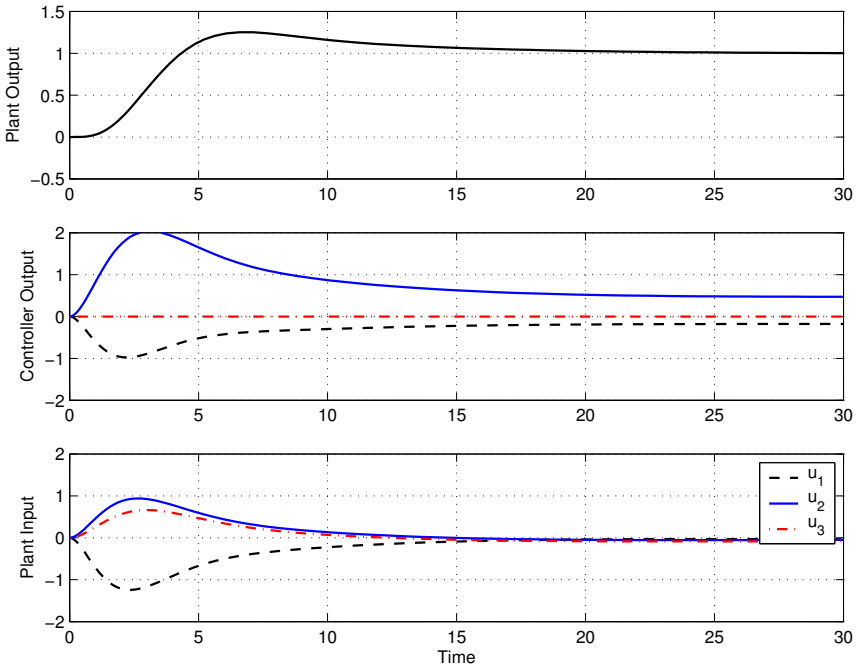

$\rho K = 0.1 I$ and $\bar{W} = I$: OK!

$\rho K = \begin{bmatrix} 100 & 0 \\ 0 & 0.1 \end{bmatrix}$ and $\bar{W} = I$: Better!

Nonlinear allocation with magnitude saturation

▷ Select nonlinear $W(\cdot)$ to increasingly penalize each actuator as it approaches its magnitude saturation limit M

$$W(u) = \left(\mathrm{diag}((1+\epsilon)M - \mathrm{abs}(\mathrm{sat}_M(u)))\right)^{-1}$$

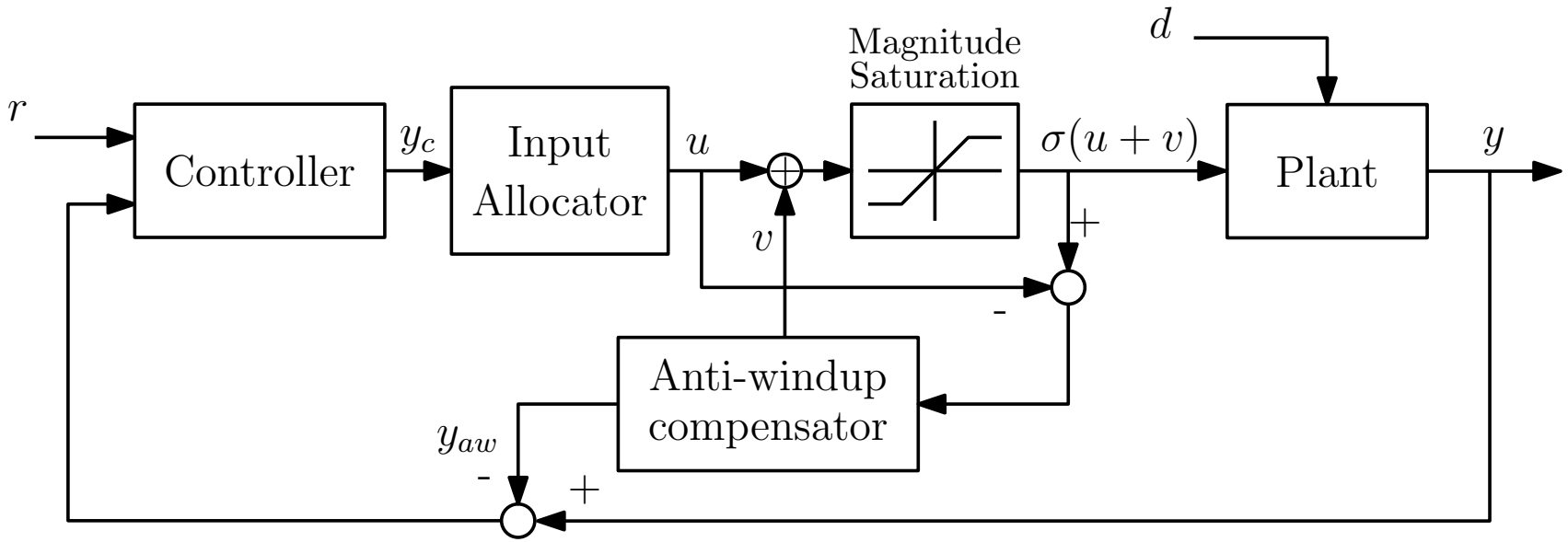

▷ **Interpretation**: *anti-windup deals* with saturation during transients; *dynamic allocation* avoids saturation at the steady-state

Example 1 (revisited with magnitude saturation)

▷ Input usage after allocation [9.5 3.37 7]% (note $u_2^* \approx 0.5 \gg m_2 = 0.01$)

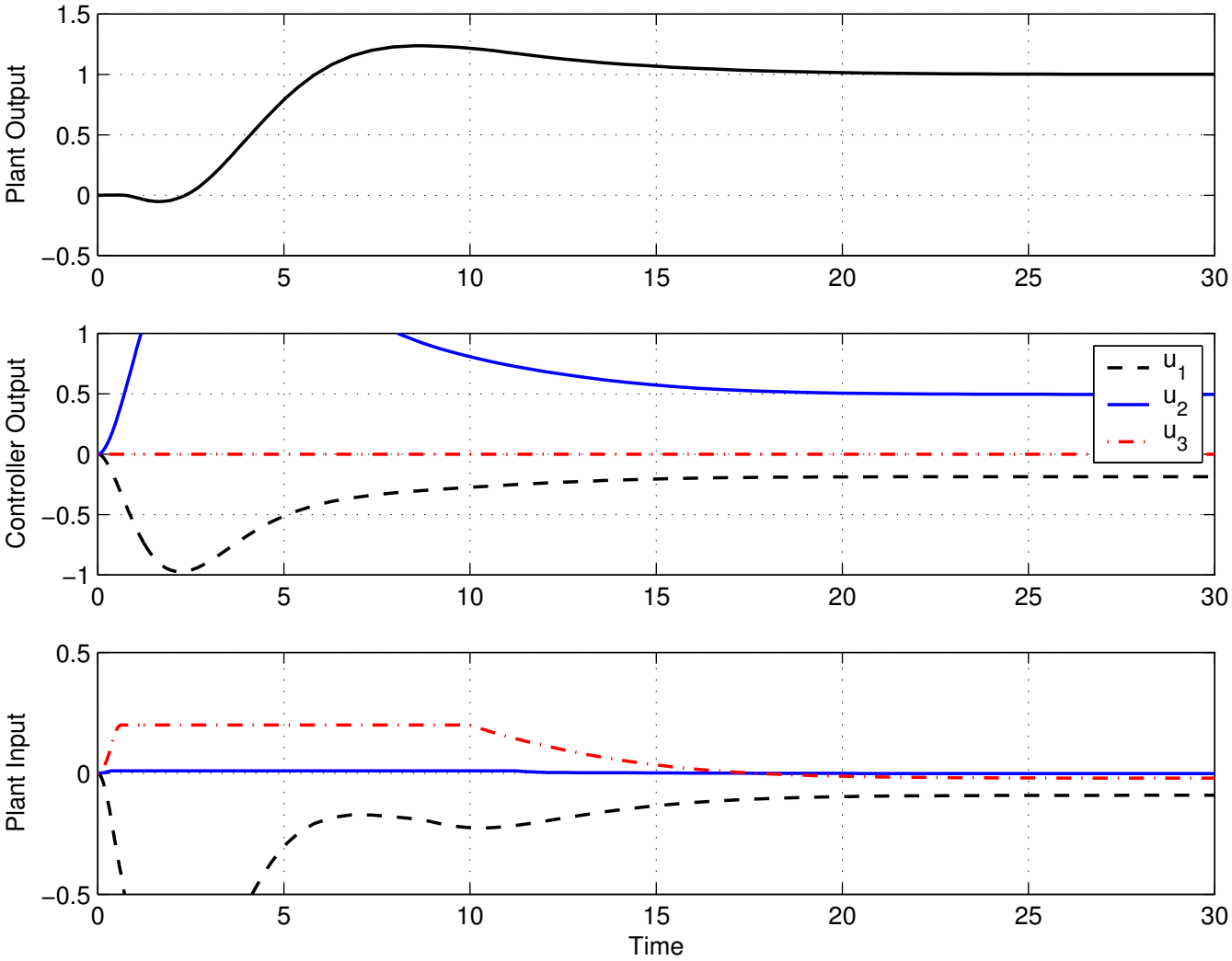

Solution readily applies to cooperative manipulation

- ▷ Multiple robots grasp an object by applying a desired wrench h_0^d
- ▷ Given h_0^d, strong redundancy in selection of effectors wrenches h^d

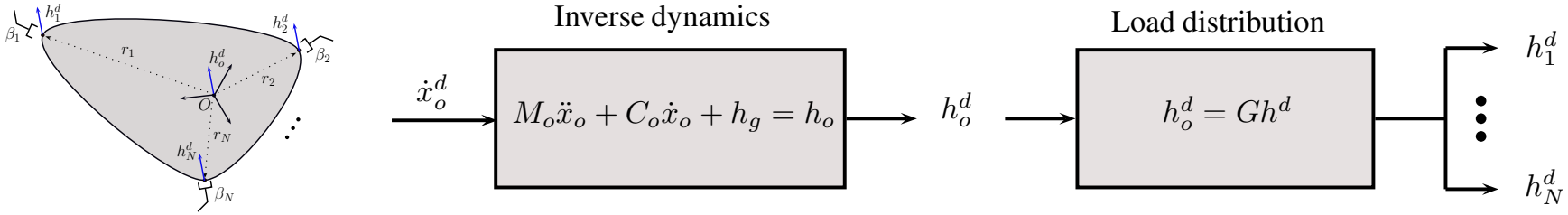

- ▷ Dynamic allocation allows to gracefully steer operating point away from joint torque saturation levels:

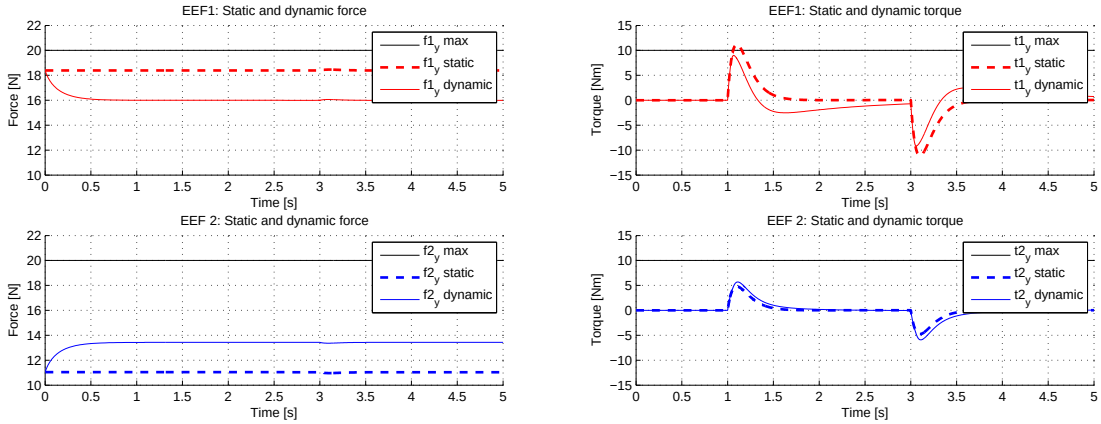

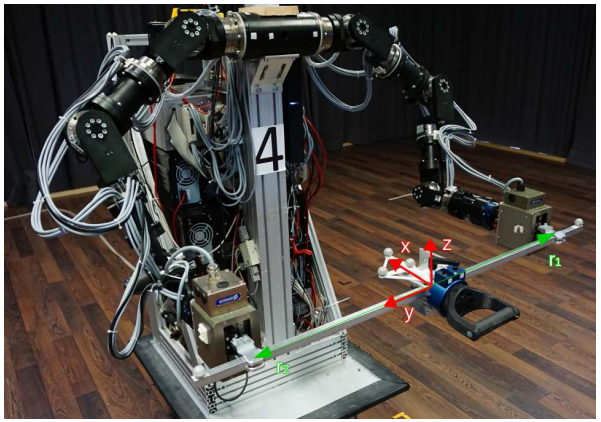

- ▷ Alternative allocation goal: nonlinearly adjust the internal forces (breaking limits, maximum beding, etc)

Outline

Application: plasma position and elongation control

▷ Frascati Tokamak Upgrade (FTU): a nuclear fusion experiment

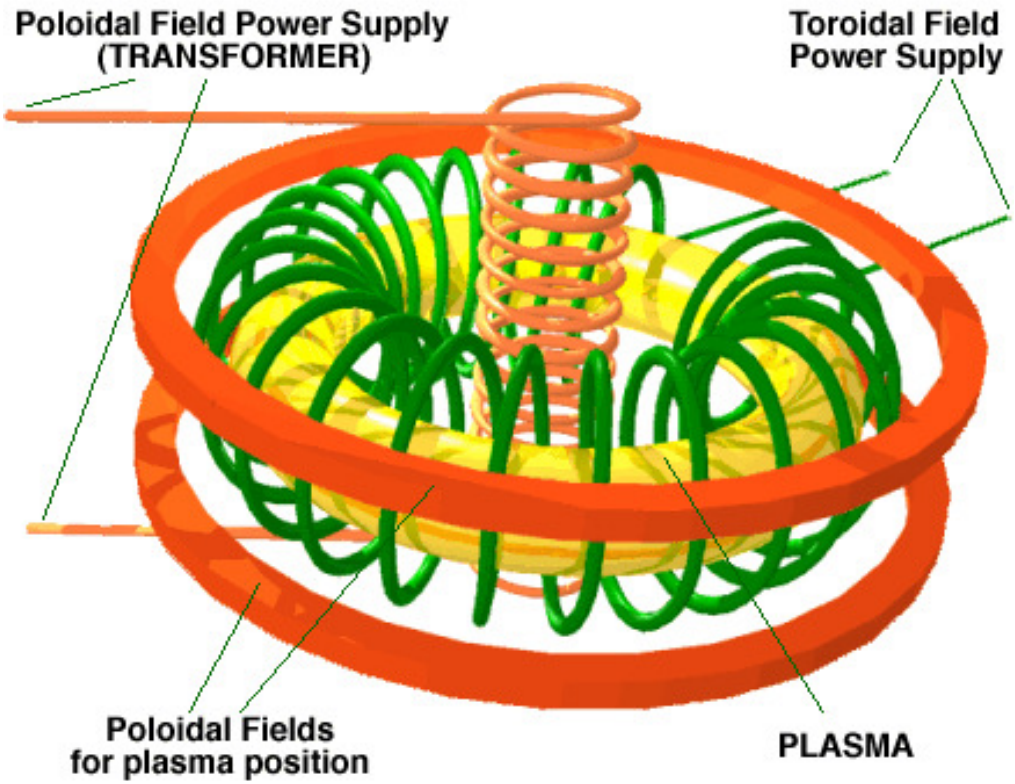

Coils and toroidal plasma

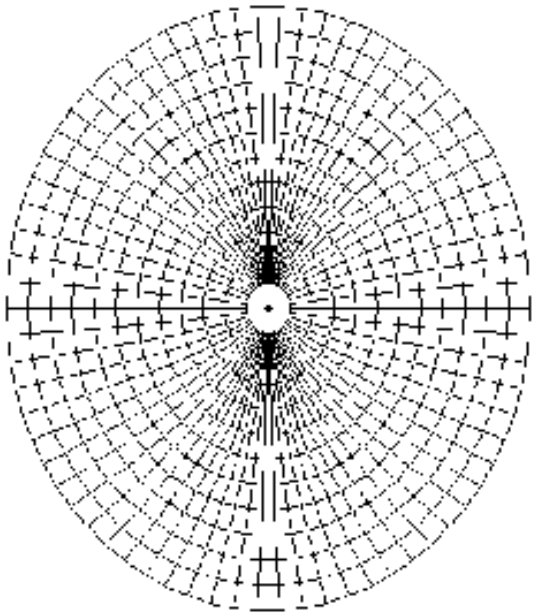

Cross section

▷ Poloidal field coils regulate plasma position and elongation

Previous FTU horizontal position regulation scheme

▷ Frascati Tokamak Upgrade:
$\Delta\Psi$ = plasma horizontal position, i_P = plasma current

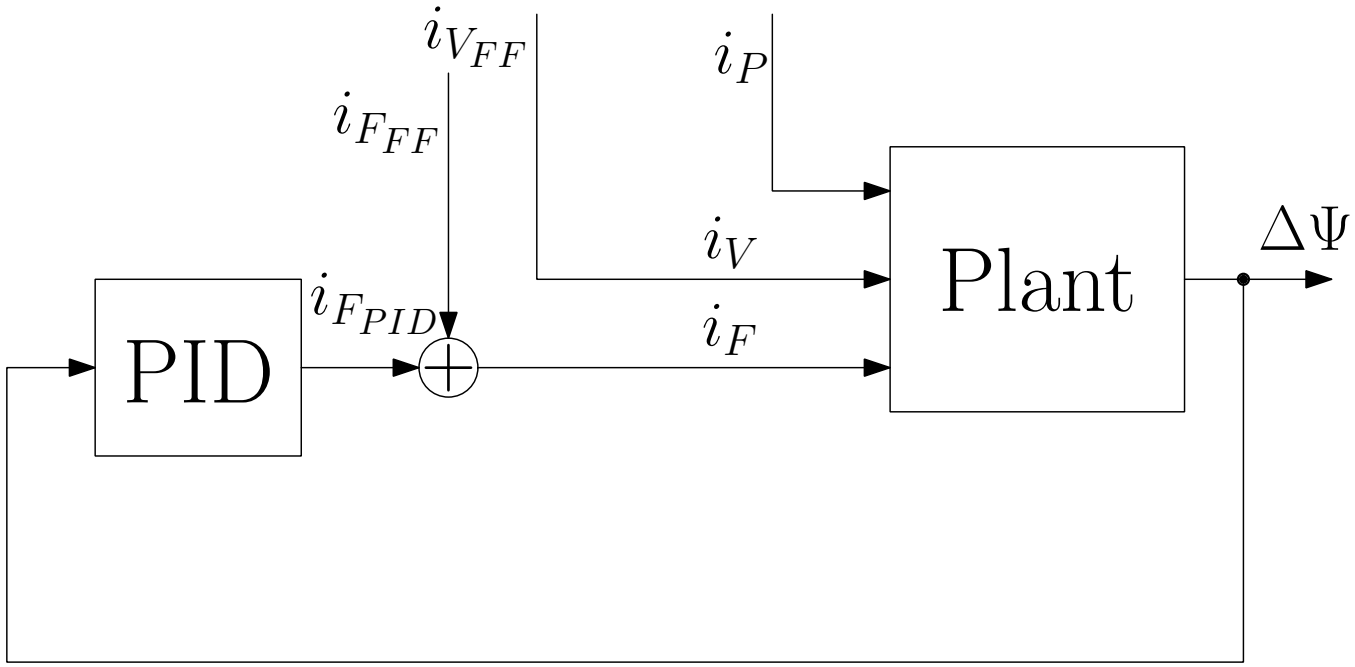

▷ Tools: V coil: very slow and powerful; F coil: fast and squeezes the plasma
▷ Goal: Want to use the F coil to perform two actions:
- high bandwith disturbance rejection on $\Delta\Psi$ $(= y)$
- low bandwith elongation, equivalently, $i_F (= u_2)$ regulation

Solution with allocator uses weak redundancy

- Transfer (slowly) control authority from F to V using dynamic allocation

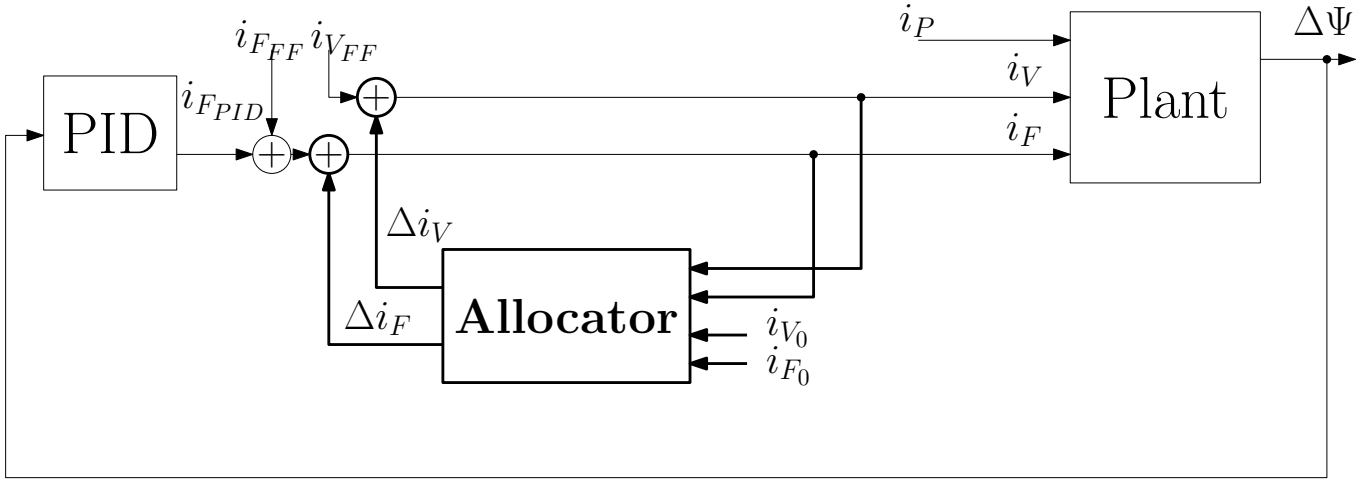

- Zoom of the allocator block (note the drift term $u_0 = u_r$ which is now a reference signal for i_F)

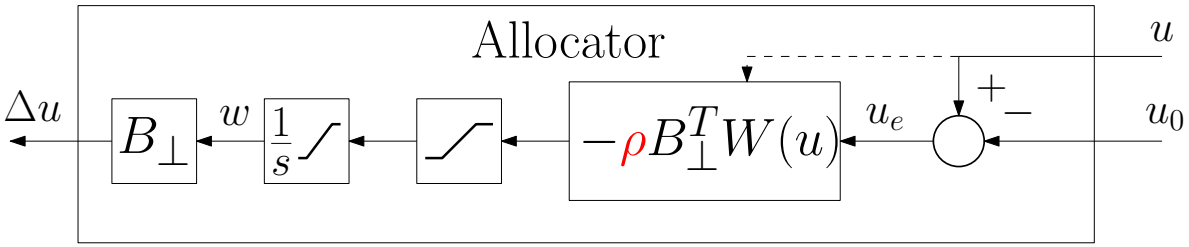

Th'm: With *weak redundnacy*, if $K > 0$ then internal stability and steady-state output response $y = \Delta\Psi$ unaffected by allocator for small enough ρ

Experiments: F current regulation

▷ i_F current is slowly regulated without affecting plant output $y = \Delta\Psi$

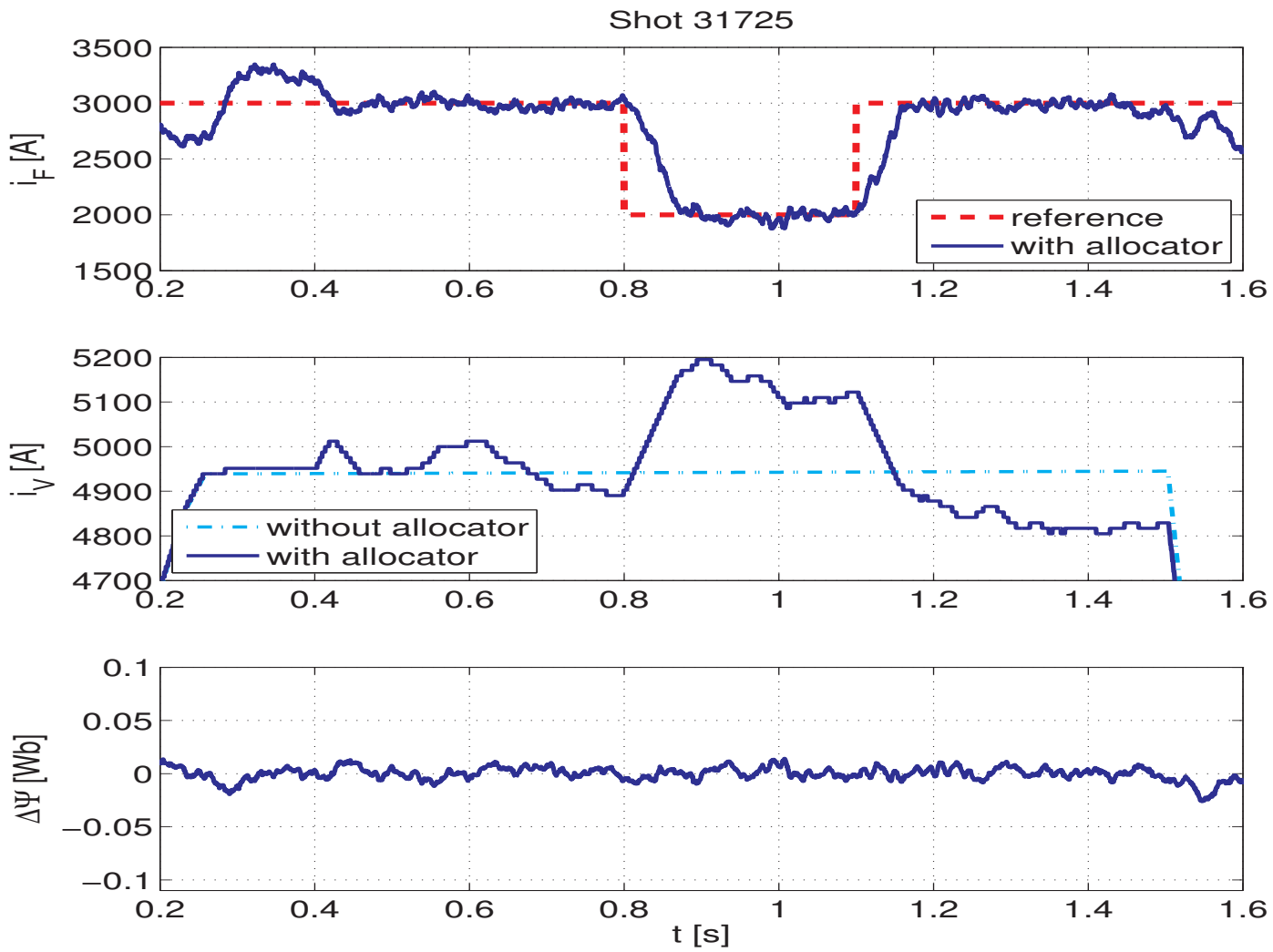

From current regulation to elongation regulation

- An approximately known nonlinear static map f relates I_F to the elongation κ

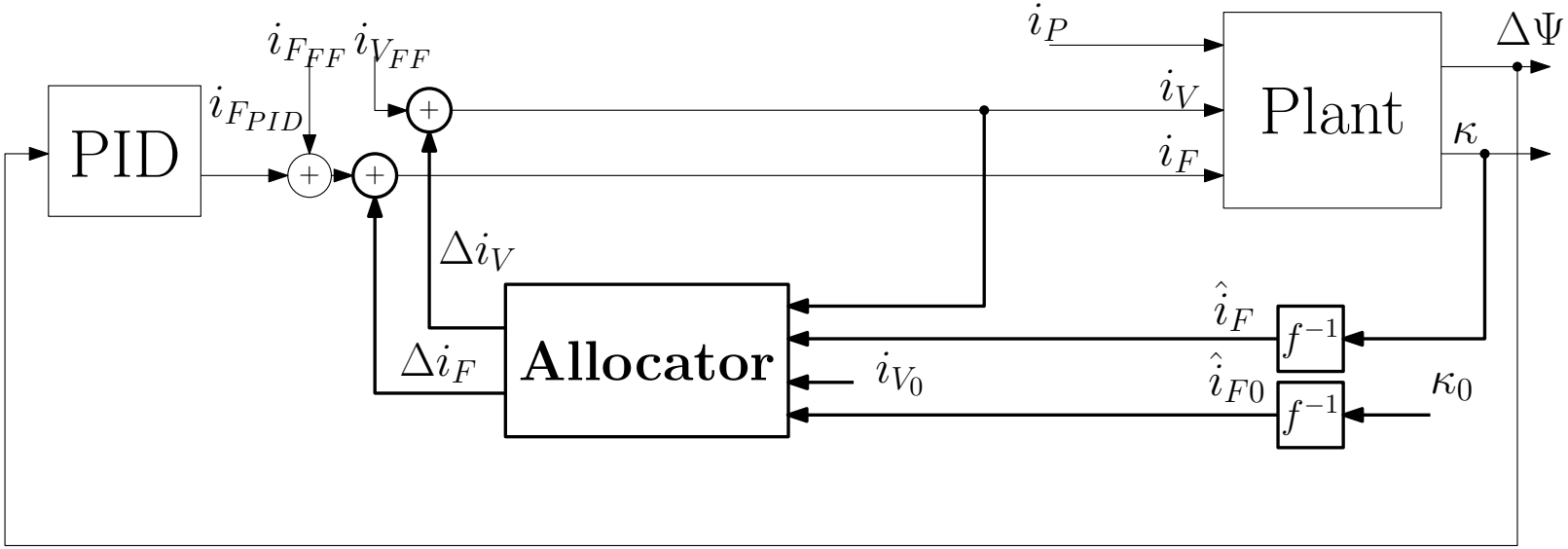

- Invert the map f to perform feedback elongation regulation via allocation
- Experiments confirm that the scheme works only if ρ is sufficiently slow

Th'm: With *weak redundnacy*, if $K > 0$ and map f is invertible, then internal stability and steady-state output response $y = \Delta\Psi$ unaffected by allocator for small enough ρ + elongation regulation $\kappa \to \kappa_0$.

Experiments: Elongation regulation

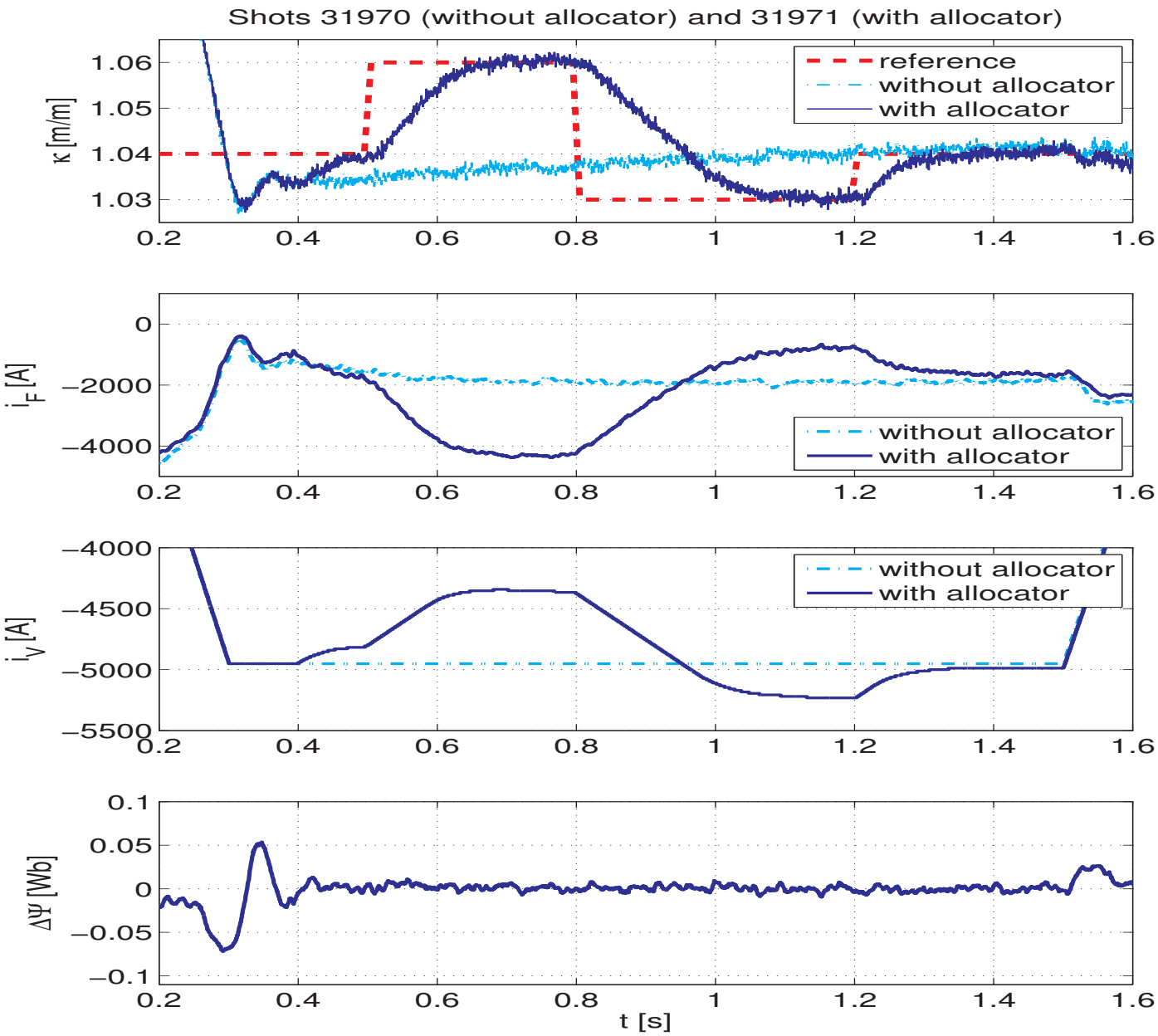

Experiments: loss of stability if parameter ρ too large

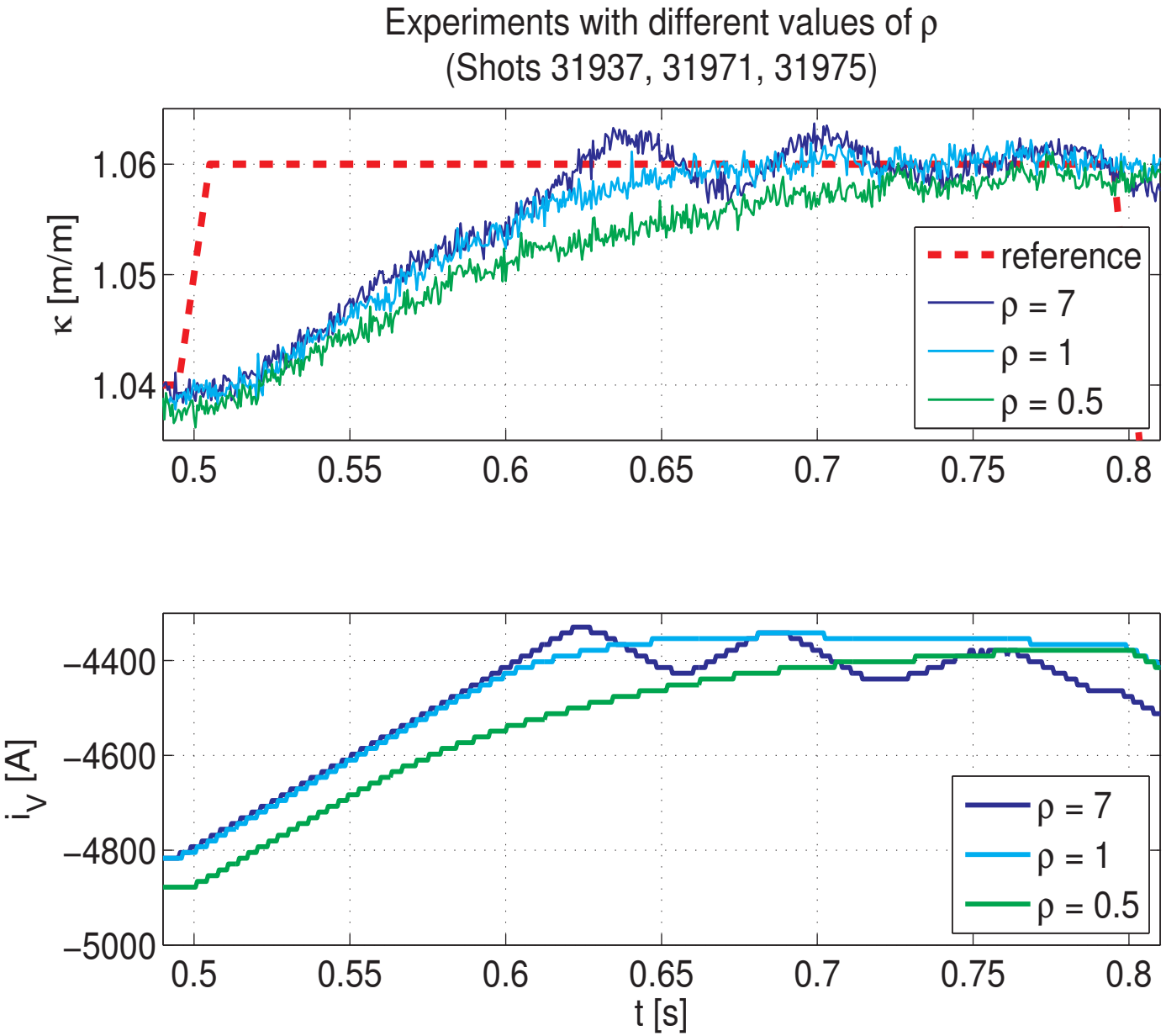

Outline

Hybrid Electric Vehicle has ICE and EM actuators

▷ A prototype built at the "University of Rome, Tor Vergata"

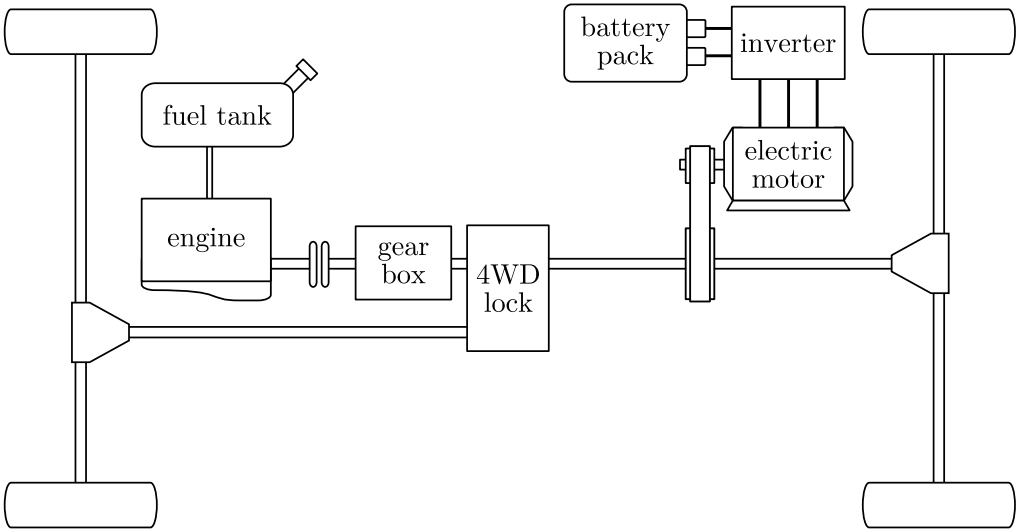

▷ Extension of framework: rendundancy after dynamic actuators

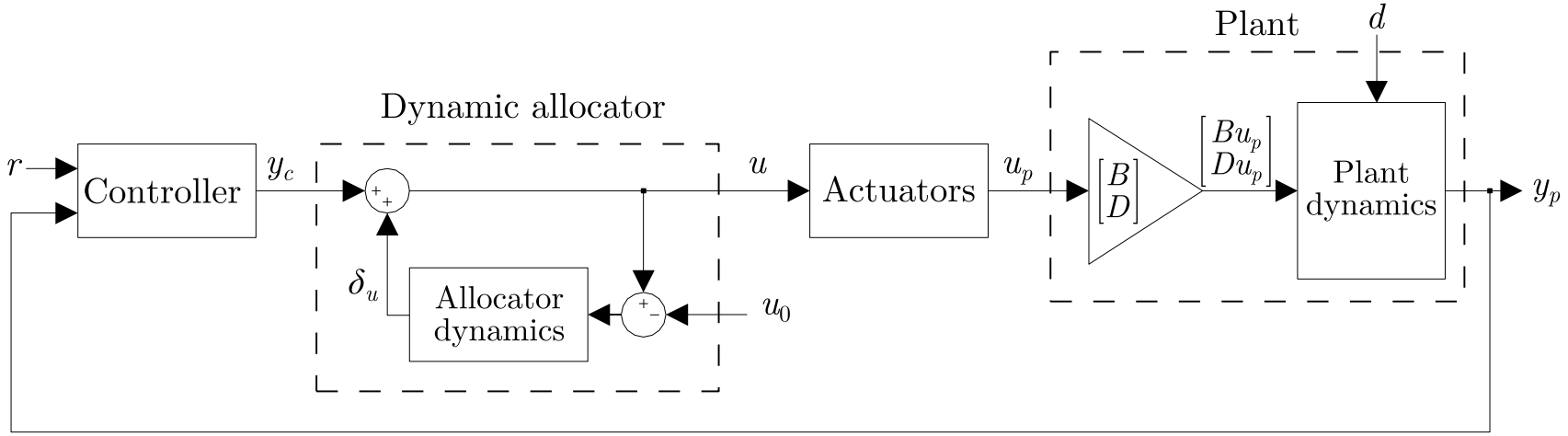

Hybrid Electric Vehicle has ICE and EM actuators

▷ Redundancy: net torque= ICE torque + EM torque

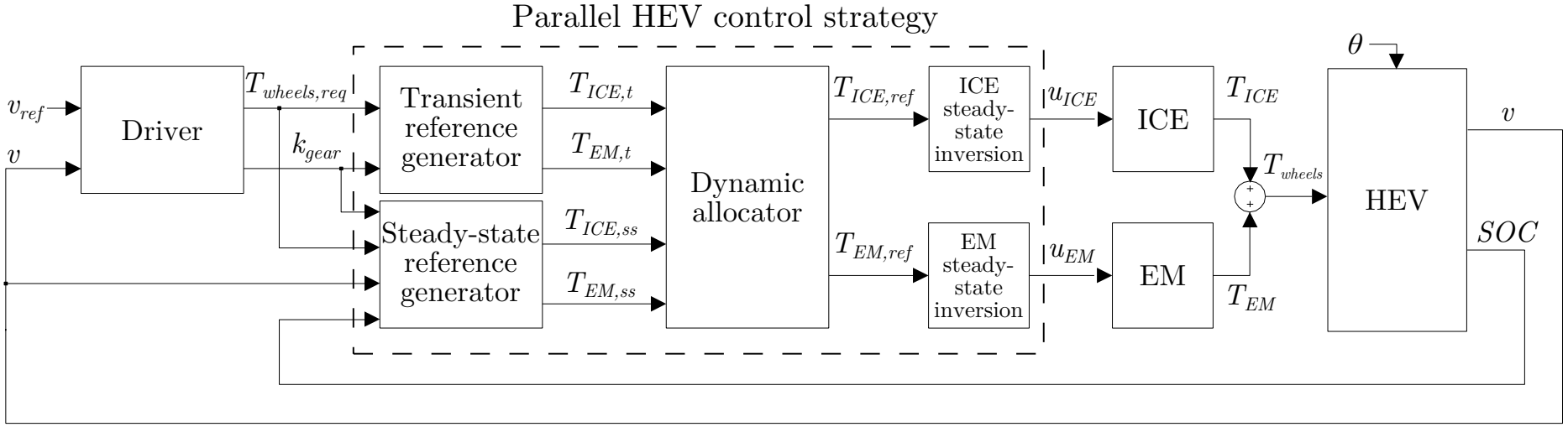

▷ Dynamic allocator inputs:

- y_c represents the transient torque request (non-optimized),
- u_0 represents the steady-state torque allocation (energy efficient)

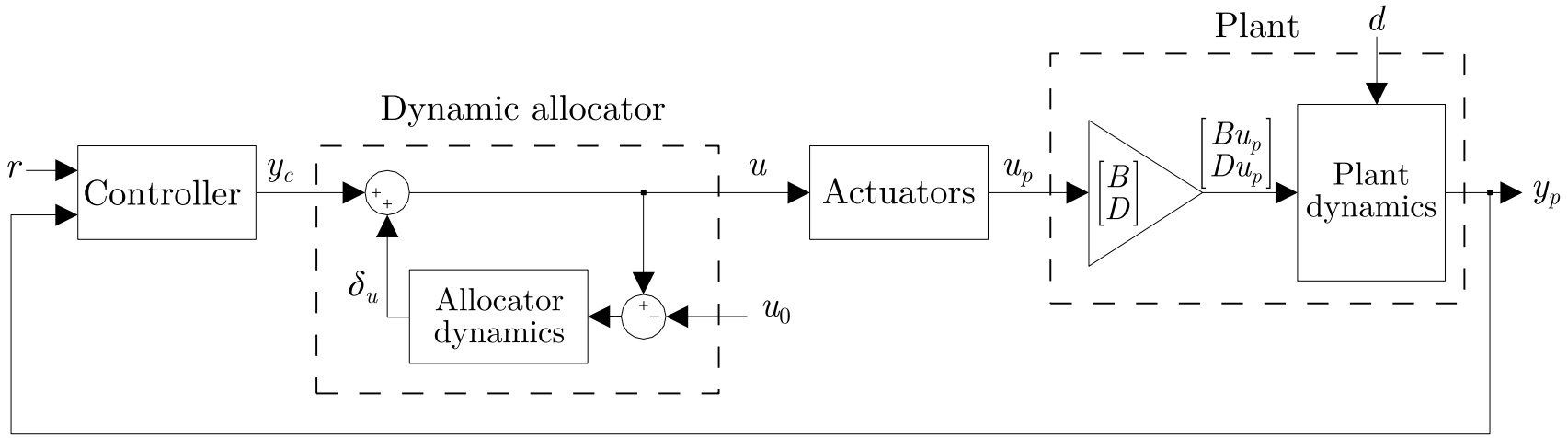

Dynamic allocation uses LCM of actuators dynamics

▷ Allocator dynamics $\bar{G}(s)$, $W(s)$ designed following a systematic procedure

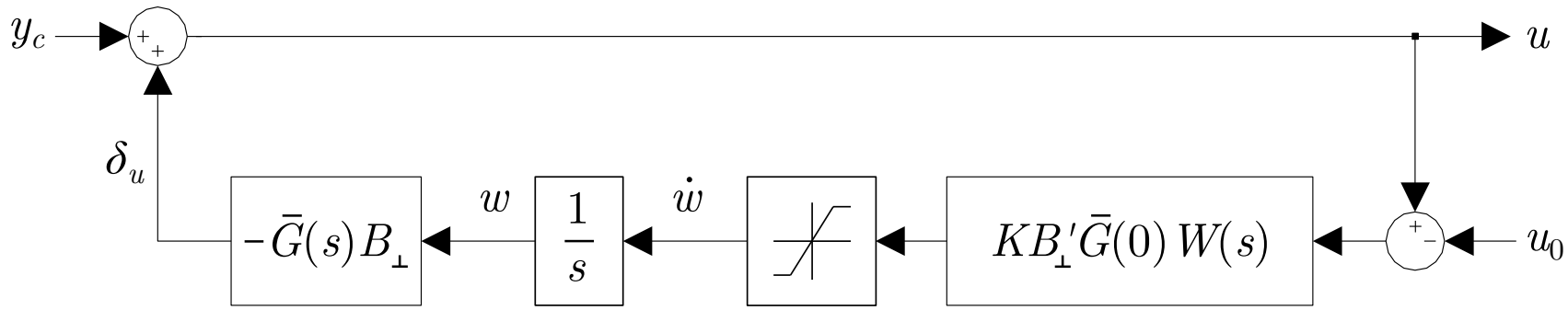

▷ Slow variation of the injected signals ensured by the presence of saturation

▷ Main result proven using saturated systems techniques

Th'm: If the actuator parameters are designed following the procedure, the **transient response** given by the controller is not modified by the allocator, and the **steady-state torque allocation** u_0 is asymptotically obtained.

Experimental response on the prototype car

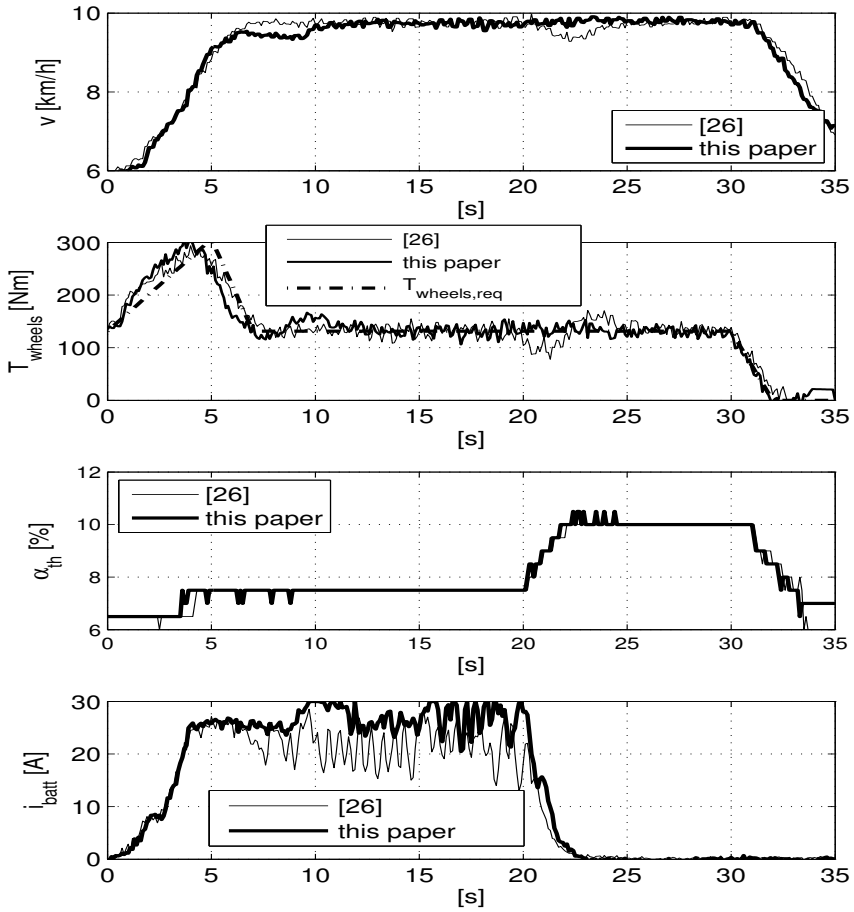

Torque regulation. Steady-state reference u_0 changes at $t = 20\ s$

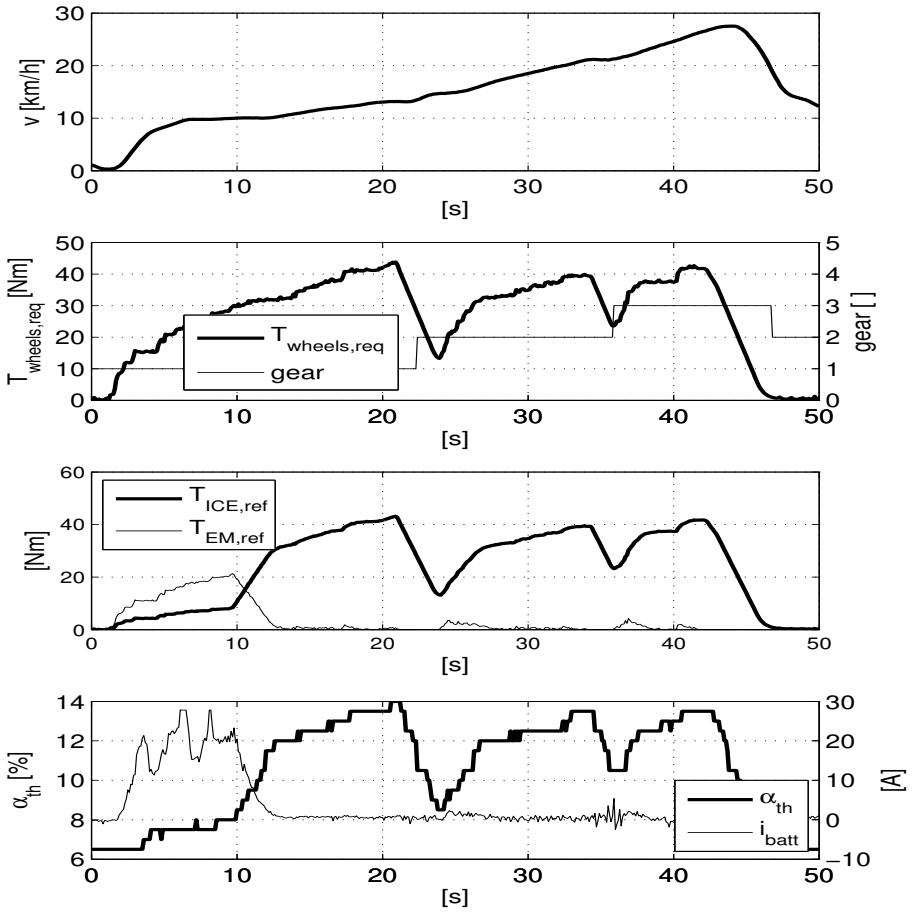

Human driver in the loop. Reference u_0 changes at $t = 10\ s$

Attitude control with reaction wheels and magnetorquers

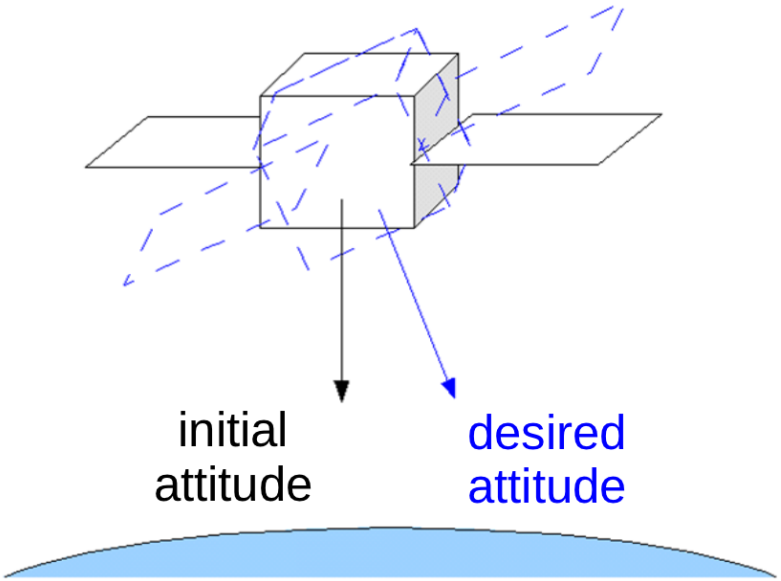

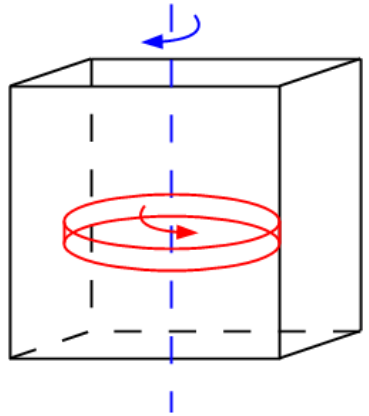

Reaction wheels

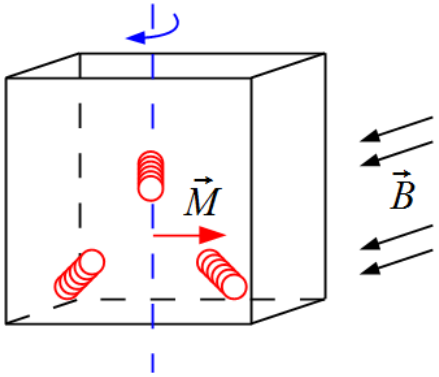

Magnetorquers

- Plant dynamics:

$$J\dot{\omega} + \omega^{\times} J\omega = \omega^{\times} h_w - \tau_w - \underbrace{\widetilde{b}^{\times}(t,q)\tau_m}_{T_m}$$

$$\dot{q} = F(\omega)q$$

- Actuator dynamics (Reaction Wheels):

$$\dot{h}_w = \tau_w$$

▷ **Reaction wheels**: if $\tau_w = k$ then $h_w = kt \rightarrow$ risk of saturation of h_w

▷ **Magnetorquers**: Controllability issues: $T_m = -\widetilde{b}^{\times}(t,q)\tau_m = -(R(q)\widetilde{b}_{\circ}(t))^{\times}\tau_m$

Attitude control with reaction wheels and magnetorquers

- ▷ Classical solution: "Cross-product law" uses separate loops and high-gain
- ▷ Proposed-solution: use static allocation in feedback from actuator state

Dynamics:

$$J\dot{\omega} + \omega^{\times} J\omega = \underbrace{-\tau_w - \omega^{\times} h_w + T_m}_{\tau}$$
$$\dot{q} = F(\omega)q$$
$$\dot{h}_w = \underbrace{-\omega^{\times} h_w - (R(q)\widetilde{b}_\circ(t))^{\times}\tau_m - \tau}_{\tau_w}$$

Control law:

$$\tau_w = -\omega^{\times} h_w - (R(q)\widetilde{b}_\circ(t))^{\times}\tau_m - \tau,$$
$$\tau_m = -\frac{(R(q)\widetilde{b}_\circ(t))^{\times}}{|\widetilde{b}_\circ(t)|^2} k_p(h_w - h_{ref})$$

τ = Hybrid attitude controller command

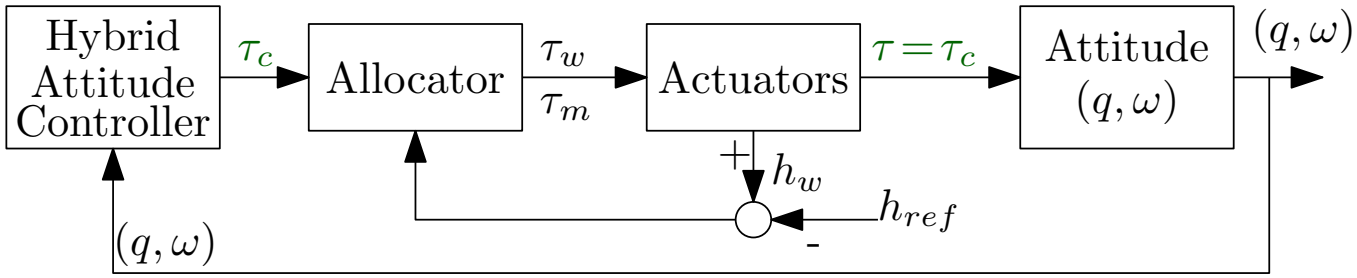

Th'm: If τ ensures GAS of the origin for (q,ω) dynamics, then allocation scheme preserve the same exact (q,ω) response and ensures GAS of $h_w = h_{ref}$.

Allocation scheme enables inverting the cascade

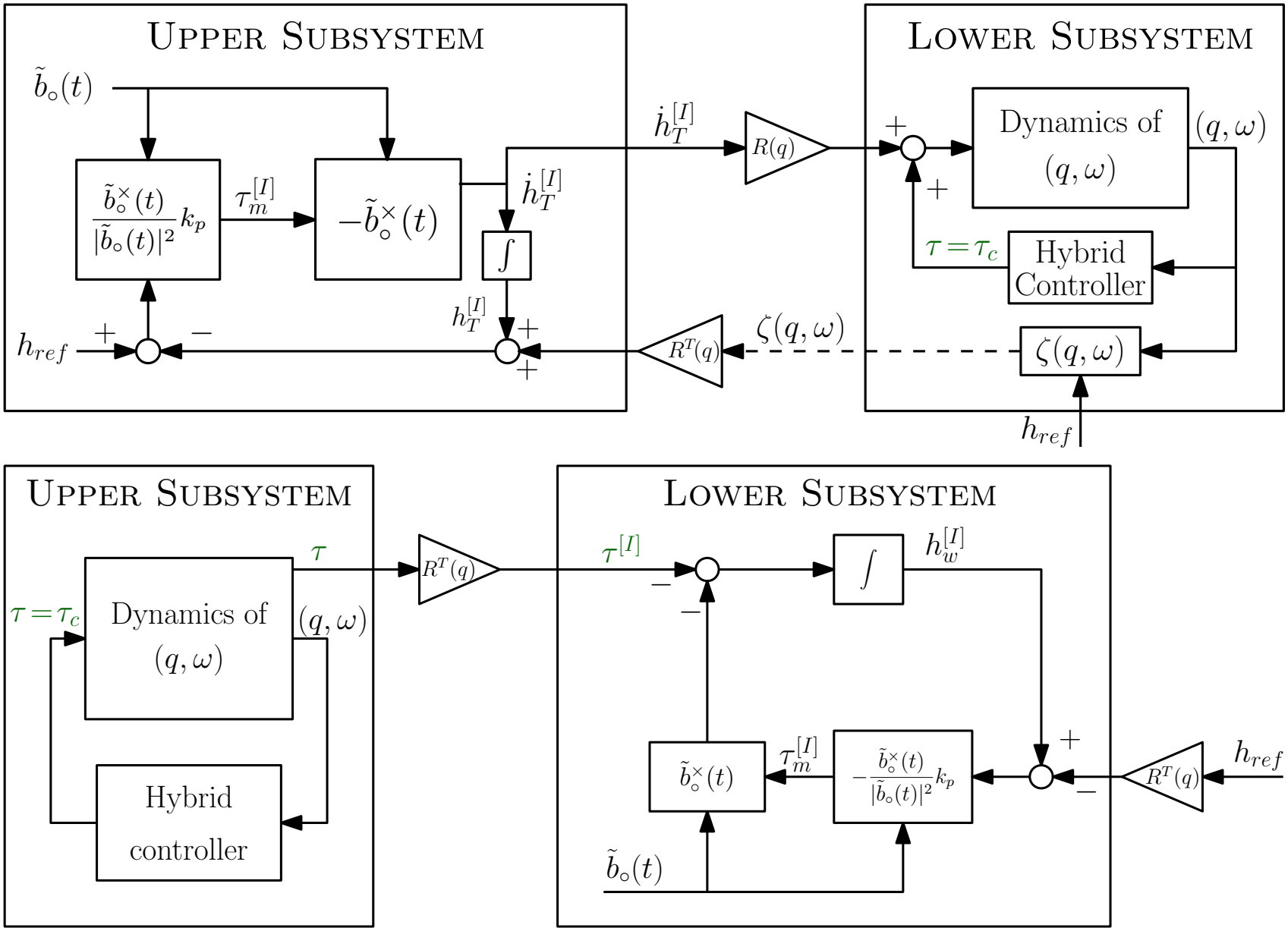

Stabilization transients with aggressive controller

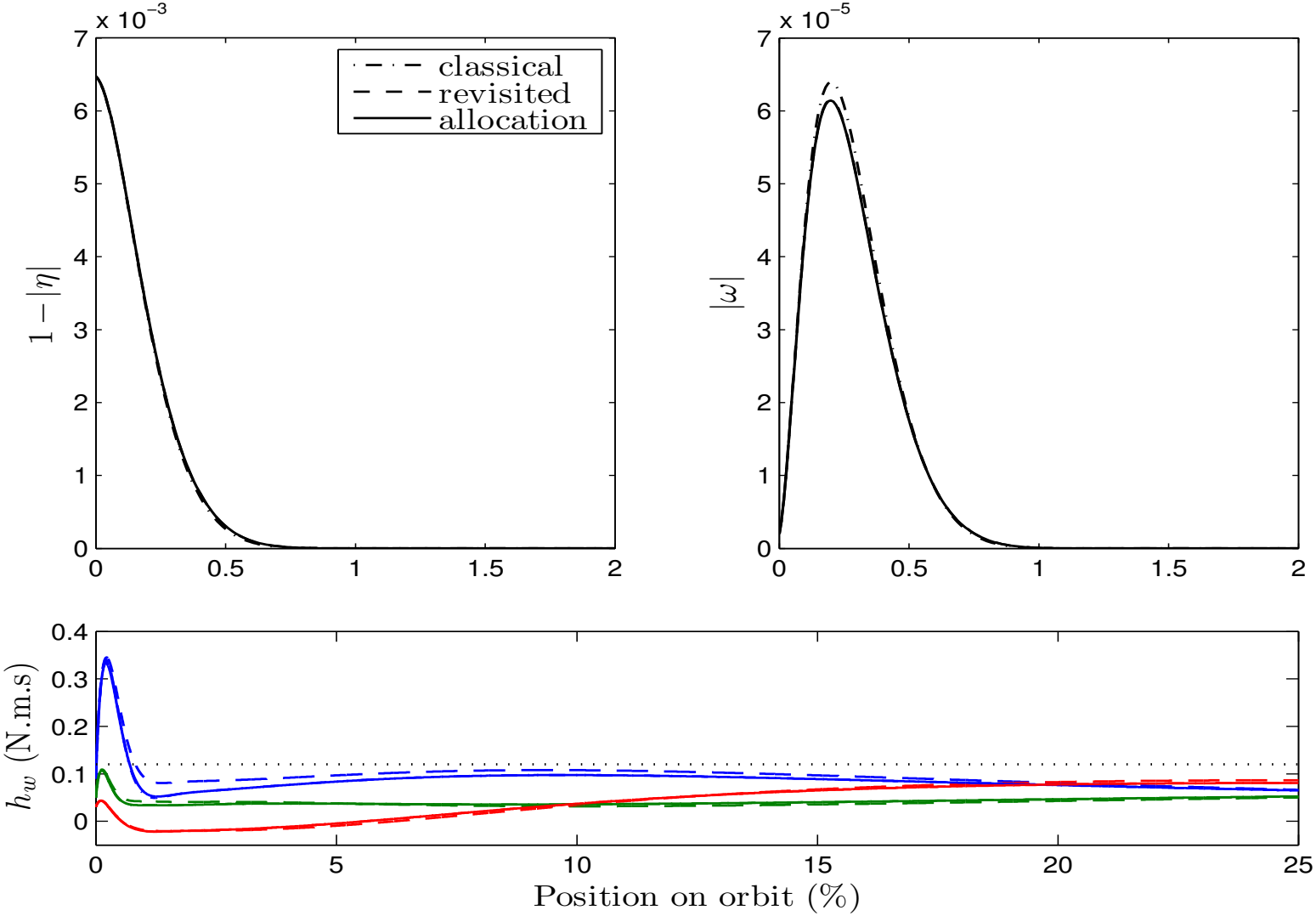

✓ **Similar results** ✗ **saturation of h_w**

Stabilization transients with non aggressive controller

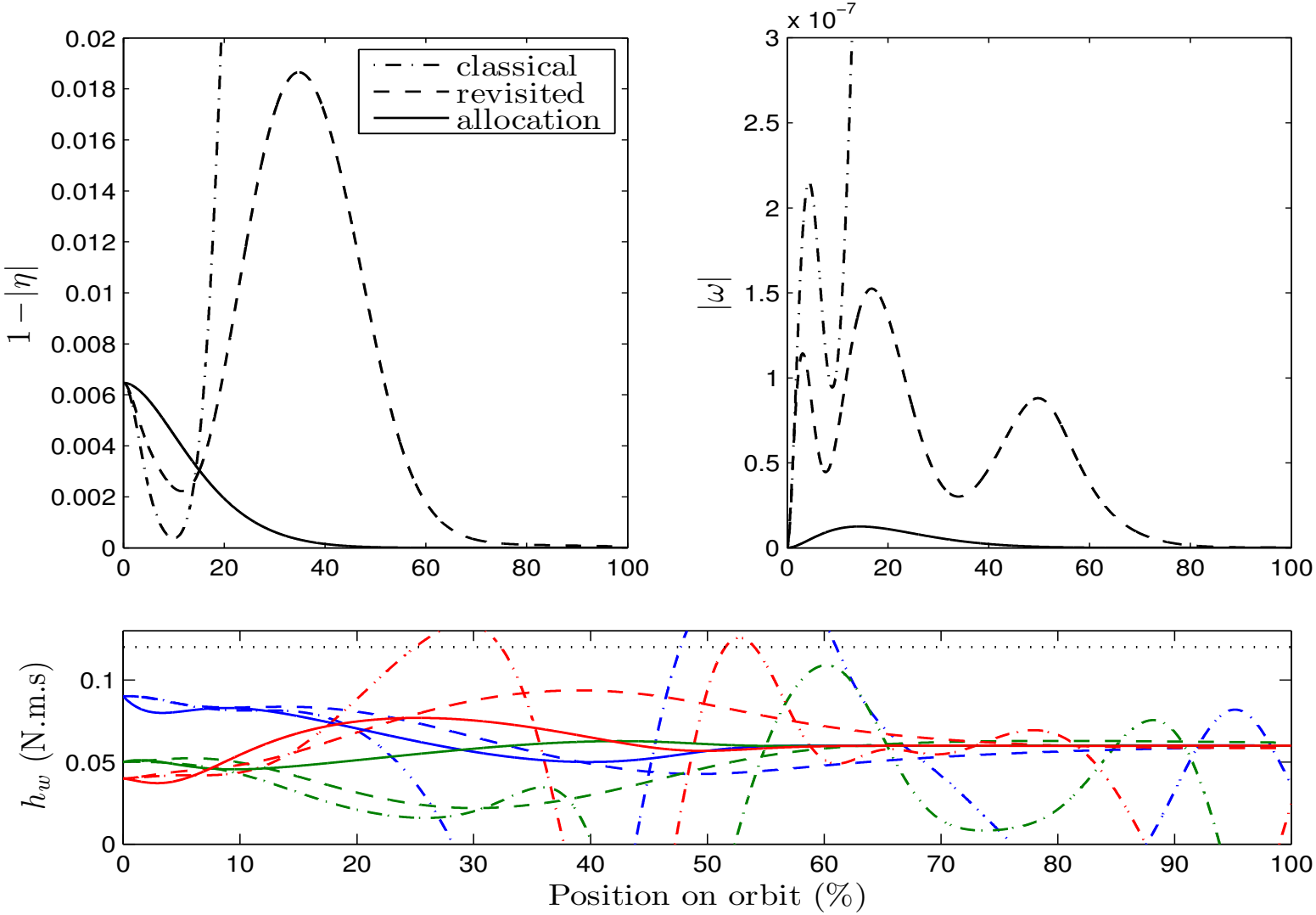

✓ **revisited and allocation controllers preserve stability**

Attitude transient decoupled from the h_w transient

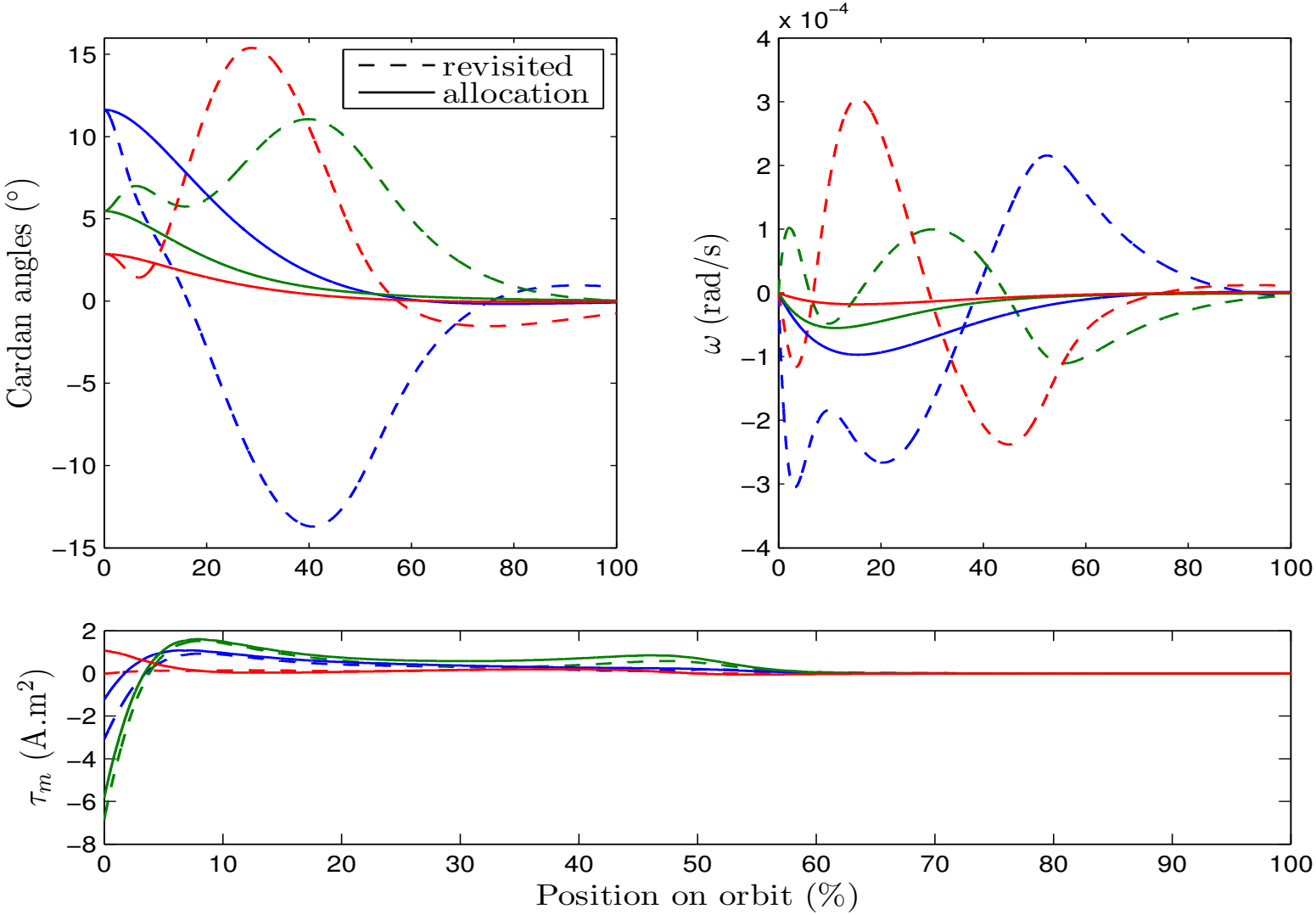

✓ **allocation-based strategy gives more regular attitude transient**

Nonlinear allocation with partial actuator measurements

- In some applications may be able to only access *virtual input* τ
- If $g(x_a)$ is invertible and $f(x_a)$ is incrementally stable, may use scheme

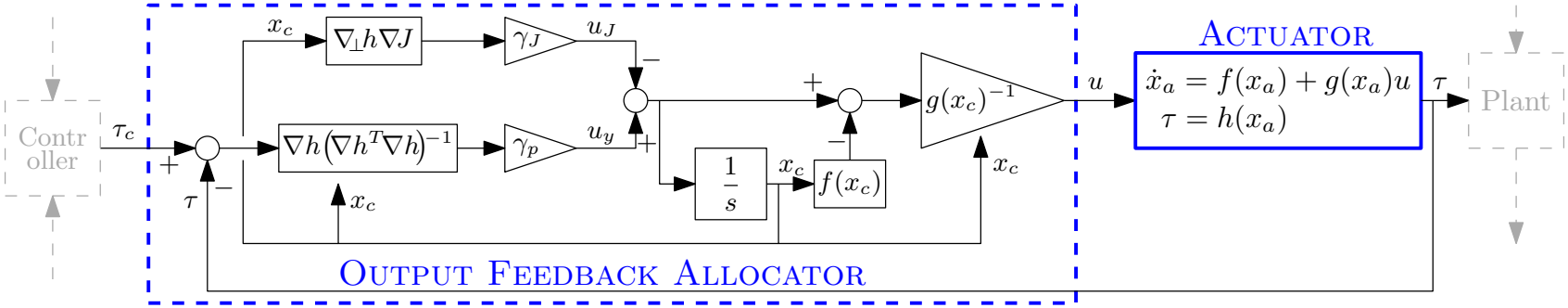

Th'm: Under stated assumptions, we have $\dot{\tau} = -\gamma_p(\tau - \tau_c)$ and (slow) convergence of x_a to the minimum of $J(x_a)$.

- Hydrodynamic dynamometer uses two valves with nonlinear output map h

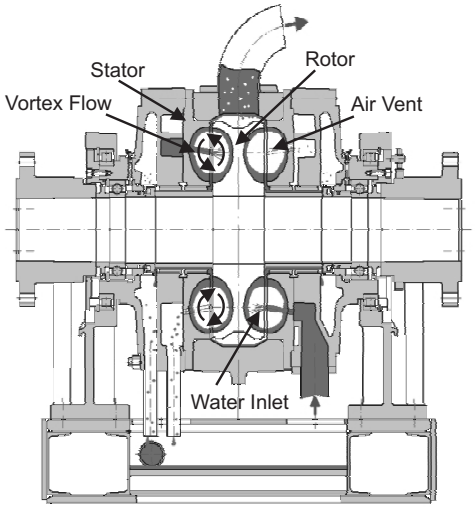

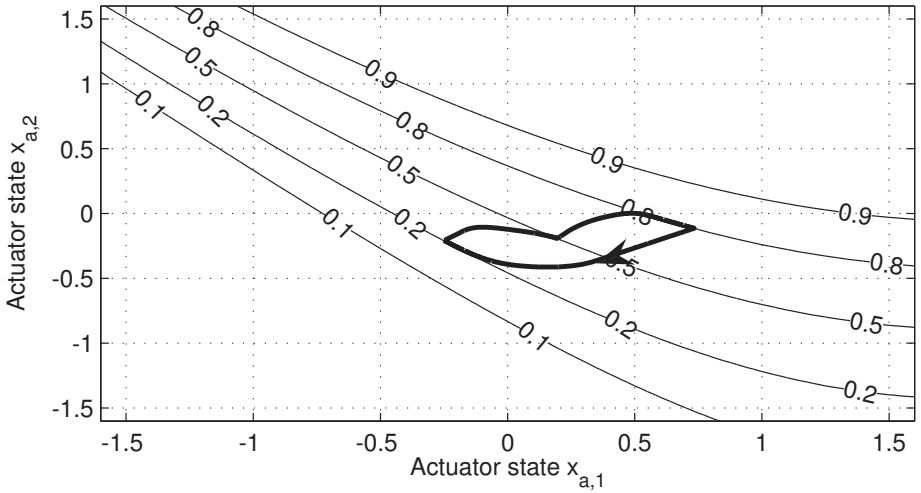

An output regulation approach to weak redundancy

▷ Generalized Francis equations provide the "Annihilator" (dynamical $B^{\perp}$)

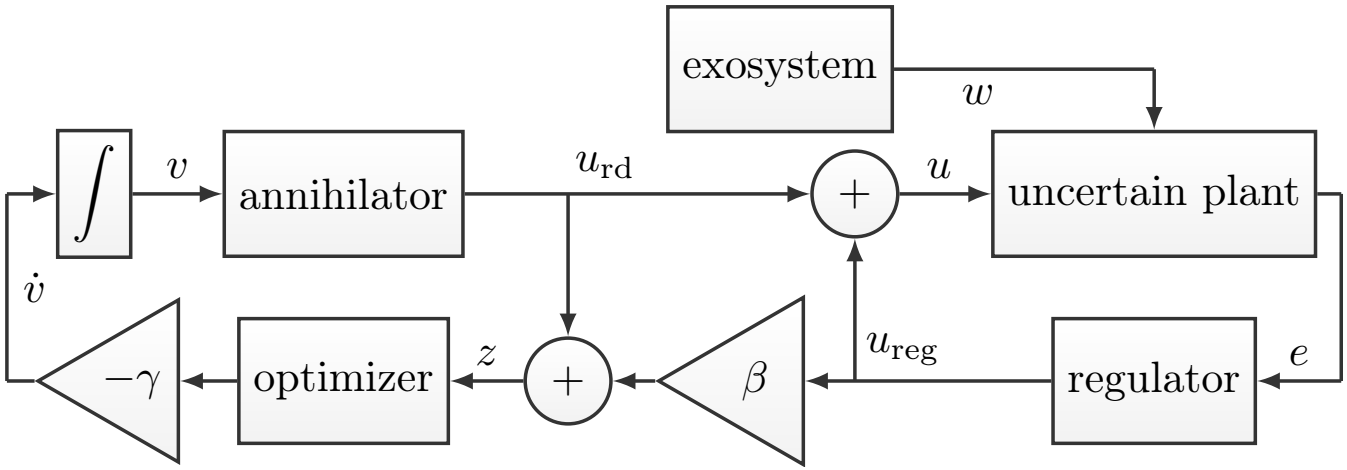

▷ Optimizer acts on Annihilator to obtain "Asymtptotic Optimality" for

$$J_1(z) = |z|_1, \quad J_2(z) = |z|_2, \quad J_\infty(z) = \max_i |z_i|^2 + \epsilon |z|^2$$

▷ **Theorem:** The proposed scheme provides:

- Robust UGAS without the exosystem
- Convergence to a steady-state (contractive) if S is Poisson stable
- Robust Asymptotic Optimality

Outline

Joint European Torus (JET) plasma shape control

- We want to control the plasma shape on a poloidal cross section.
- Shape is described by a finite number of geometrical parameters called **gaps**.

- Gaps are defined as the distances between the plasma boundary and the first wall along certain segments.
- Gaps values are evaluated from magnetic sensor measurements by estimation algorithms.
- We want to control:

  32 outputs y.

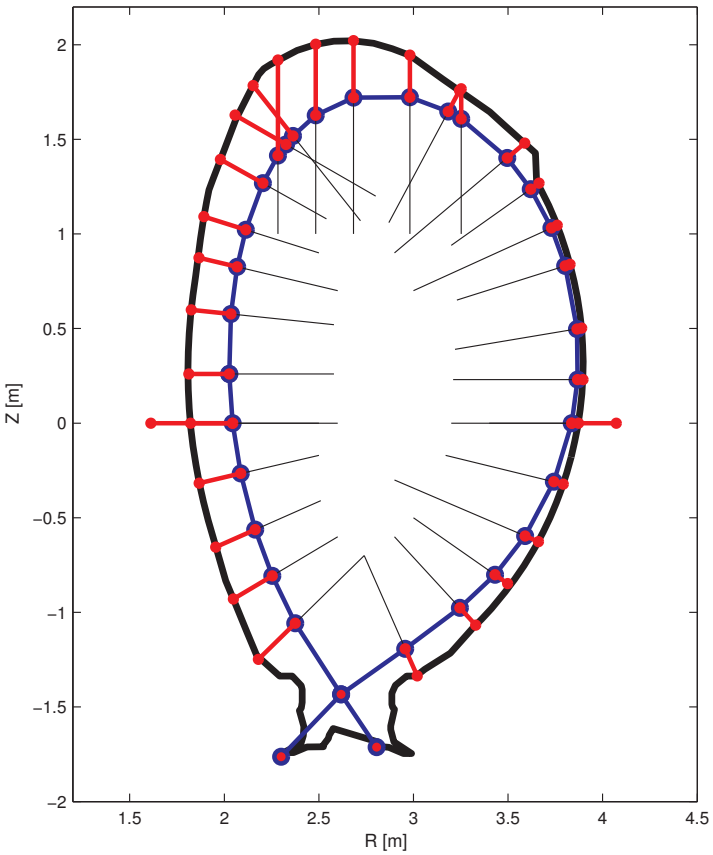

JET shape control has no input redundancy

- JET has 8 poloidal field (PF) coils available as actuators for plasma shape control.
- JET PF coils are connected to form 9 circuits.
- Control inputs represented by currents flowing in the circuits.
- Inputs available:

  9 control inputs u.

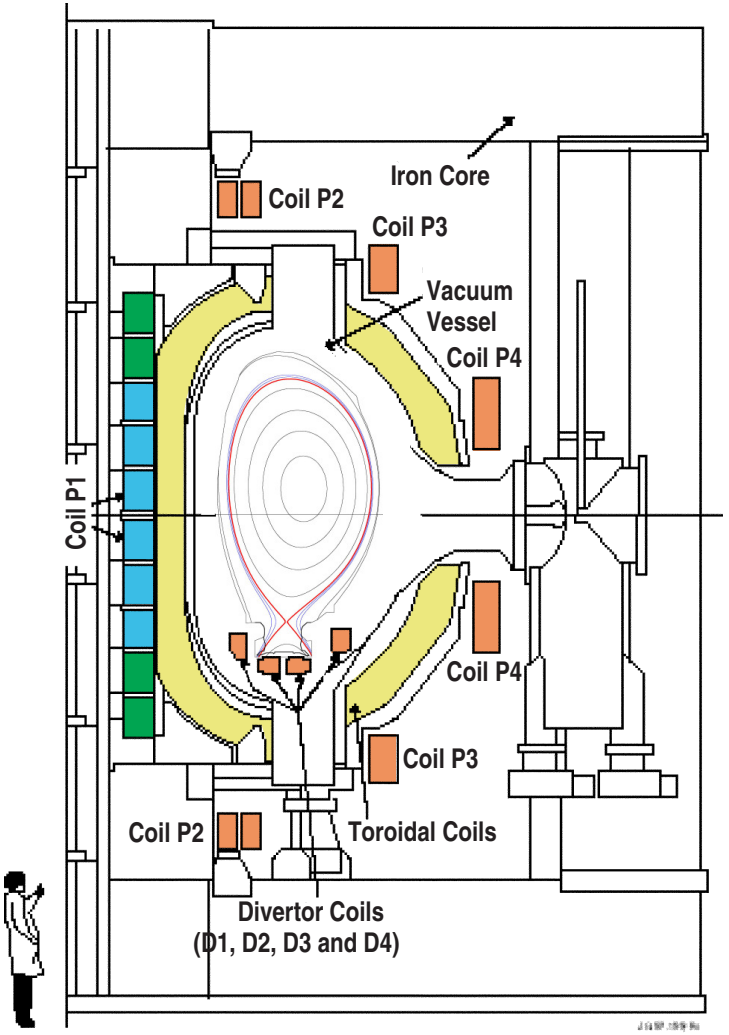

▷ No redundant inputs: still need achieve saturation avoidance!

Recall allocator features for the redundant case

▷ Essential features of the dynamic allocator seen before

$$\dot{w} = -\rho K B_\perp^T \nabla J$$
$$u = y_c + B_\perp w$$

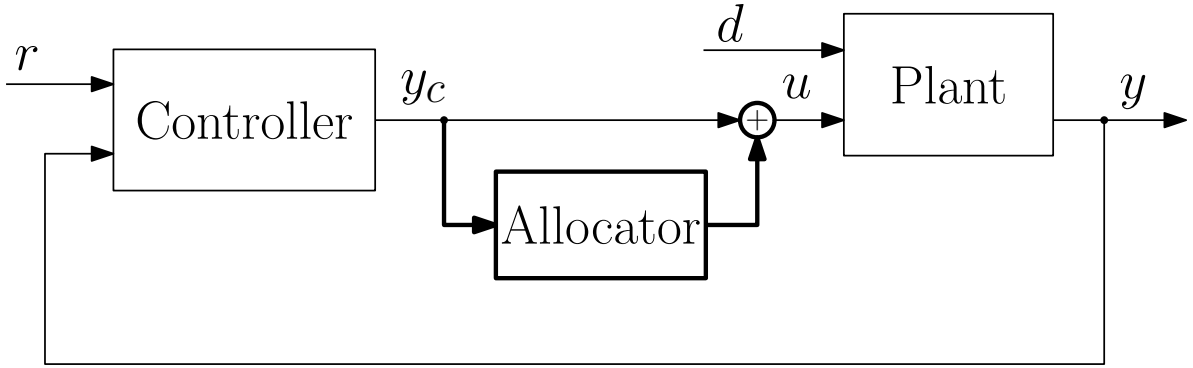

▷ The columns of $B_\perp$ correspond to the redundant directions

▷ K diagonal allows to promote/penalize different redundant directions

▷ $\bar{W}$ imposes the optimality criterion: u converges to

$$u^\star = \underset{w}{\operatorname{argmin}} (u - u_0)^T \bar{W} (u - u_0), \text{ subject to: } u = y_c^\star + B_\perp w,$$

namely minizes cost $J = (u - u_0)^T \bar{W} (u - u_0)$.

▷ ρ, positive scalar allows to adjust convergence speed

Extended cost function and new "trade-off" allocator

▷ We introduce a more general **cost function** [before]

$$J_e(u, \delta y) \qquad [J = (u - u_0)^T \bar{W}(u - u_0)]$$

▷ Minimum of J_e is a **trade-off between** ($\star$ denotes steady state values).

- the modified steady state value of the **plant input** $u^\star$ and
- the associated **output modification** $\delta y^\star$ with respect to the original $y^\star$

▷ The new allocator is described by the equations [before] :

$$\begin{aligned} \dot{w} &= -\rho K B_0^T \begin{bmatrix} I \\ P^\star \end{bmatrix}^T \nabla J_e \\ u &= y_c + B_0 w \end{aligned} \qquad \left[\begin{aligned} \dot{w} &= -\rho K B_\perp^T \nabla J \\ u &= y_c + B_\perp w \end{aligned} \right]$$

▷ B_0 is a suitable full column rank matrix, generalizing the matrix $B_\perp$ (all input directions are potentially "redundant" now).

Allocator now also injects signals at plant output

▷ New allocator injects extra signal $\delta y = P^\star y_a$ so as to not "fight" against the controller at the steady-state:

$$\begin{aligned} u_c &= y - P^\star B_0 w = y - P^\star y_a \\ u &= y_c + B_0 w = y_c + y_a \end{aligned}$$

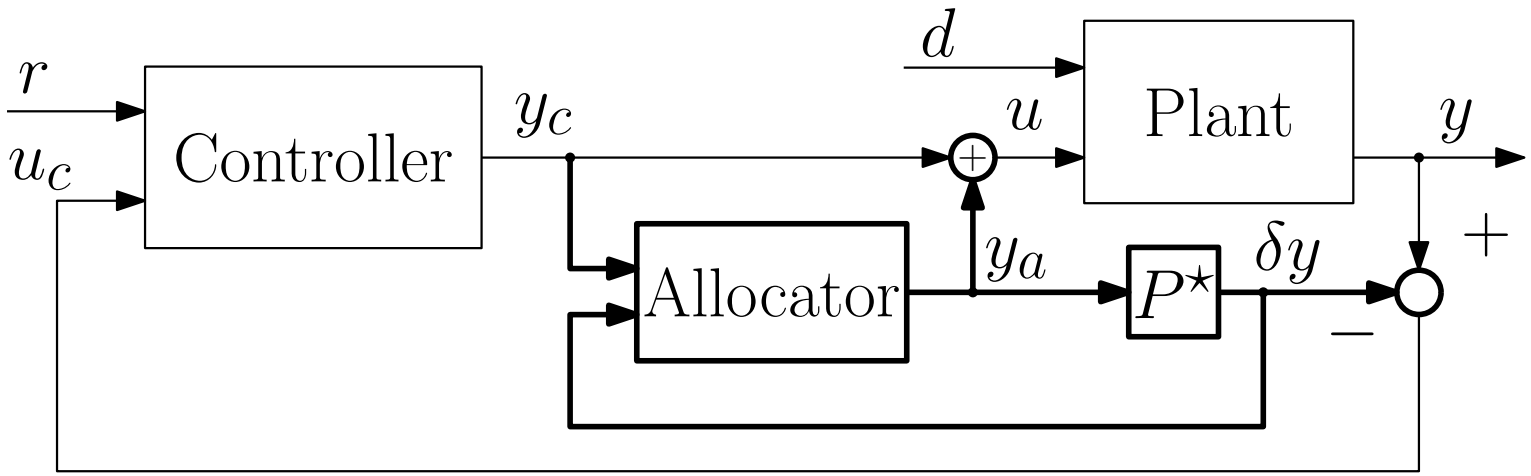

Th'm Under some convexity assumptions on nonlinear cost J_e, for sufficiently small ρ the allocator is such that, under constant inputs, $(u(t), \delta y(t))$ converge to the minimizer of J_e.

Example of a cost function: penalize u and δy

A possible selection of the cost function is

$$J_e(u, \delta y) = \sum_{i=1}^{n_u} a_i \mathrm{dz}(u_i)^2 + \sum_{i=1}^{n_y} b_i (\delta y_i)^2$$

where $\mathrm{dz}(u_i) = \mathrm{sign}(u_i) \max\{0, |u_i| - 1\}$, $a_i \geq 0$, $i = 1, \ldots, n_u$ and $b_i > 0$ $i = 1, \ldots, n_y$.

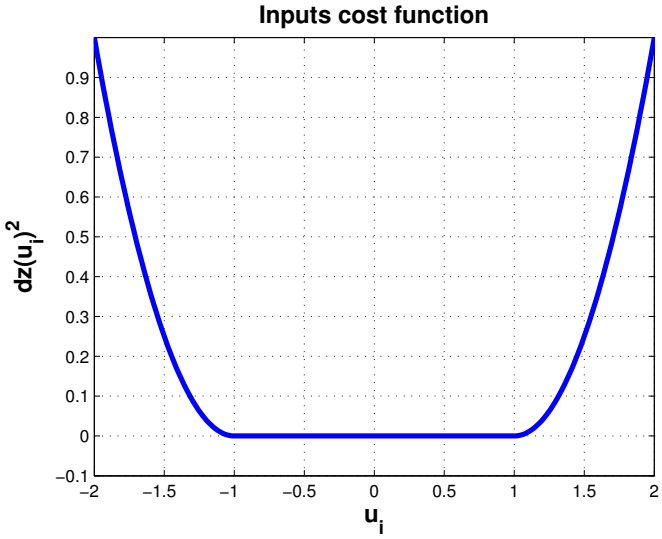

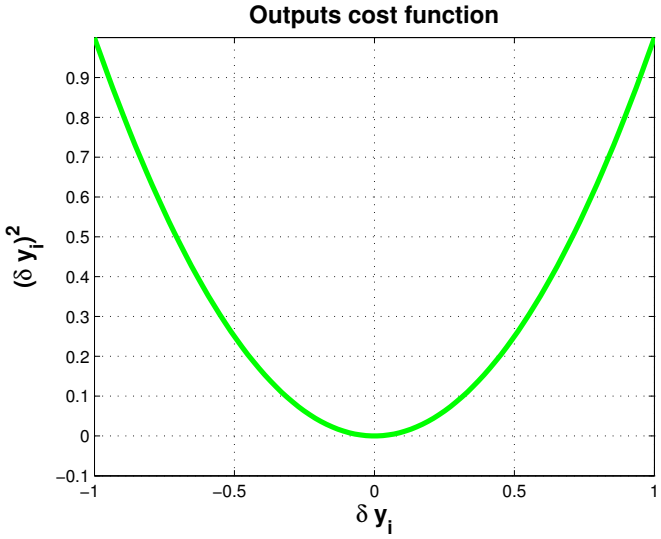

Alternative non symmetric choices are possible

Steady-state allocation: penalize input u

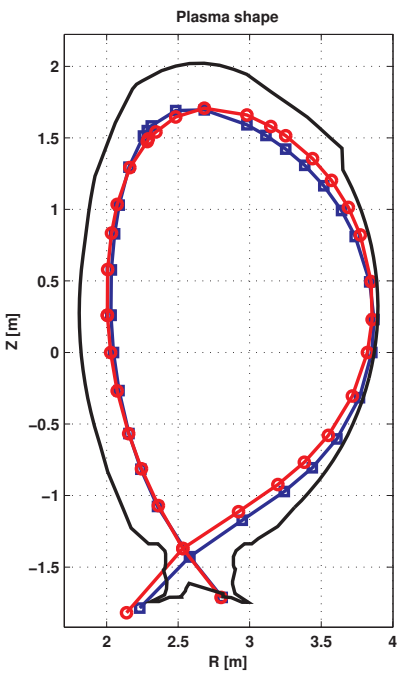

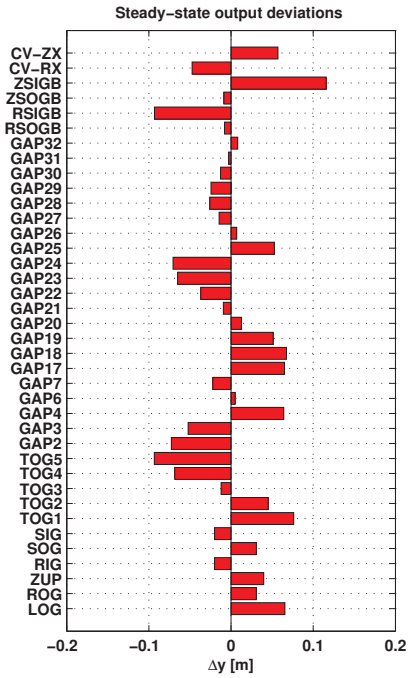

- Allocated shape (red baloon) greatly modified wrt the nominal shape (blue baloon)
- ID1 is moved away from saturation by allocator

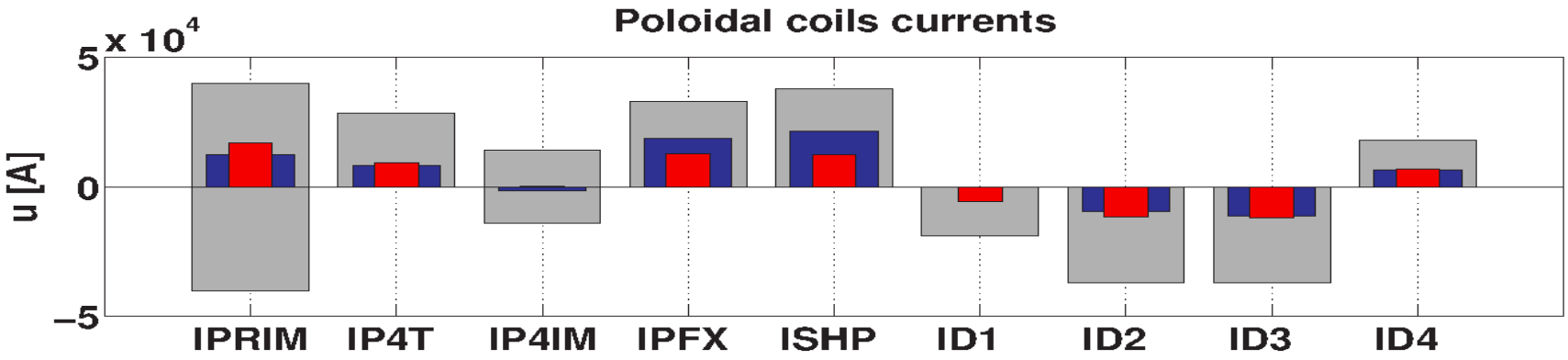

Input ranges (gray), controller output y_c (blue), allocated input u (red)

Steady-state allocation: penalize output y

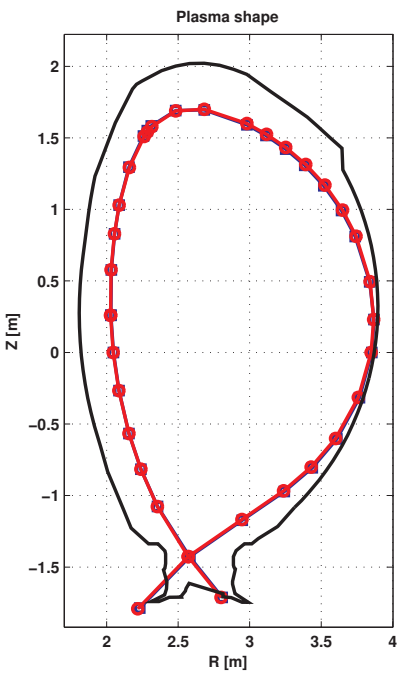

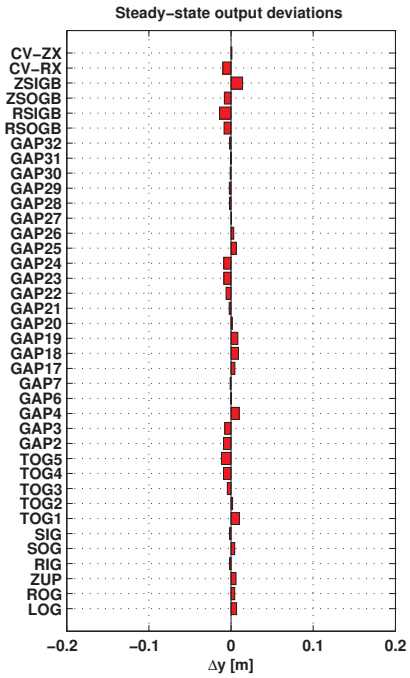

- Allocated shape (red baloon) slightly modified wrt the nominal shape (blue baloon)
- Increasing output penalty, shape modification $\delta y^\star$ is reduced
- ID1 comes back very close to saturation level

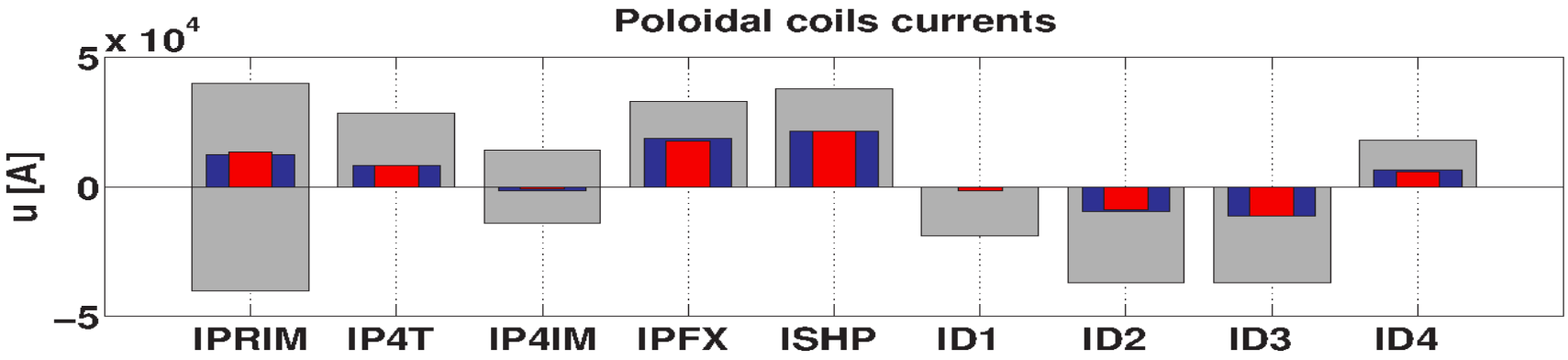

Input ranges (gray), controller output y_c (blue), allocated input u (red)

Steady-state allocation: restrict B_0 to nail down outputs

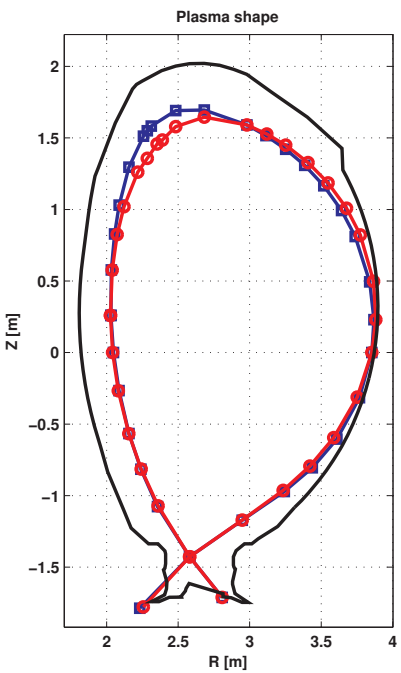

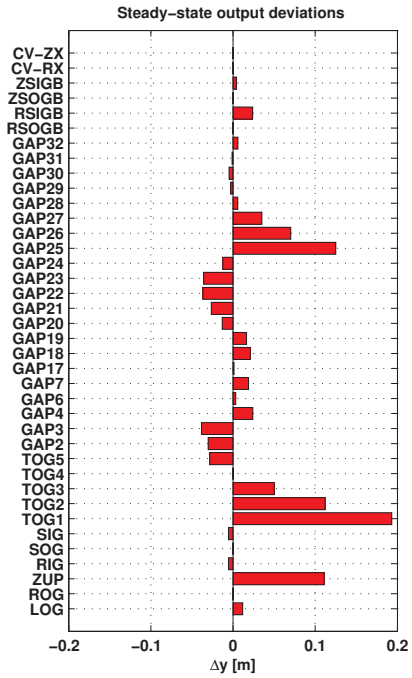

- Allocated shape (red baloon) nominal shape (blue baloon)
- Penalize input u as in first test
- Remove columns from B_0 to fix 5 outputs (CV-RX, CV-ZX, ZSOGB, RSIGB and RSOGB, i.e. X-point and strike points) and one input (IP4T current)
- ID1 again far from saturation level

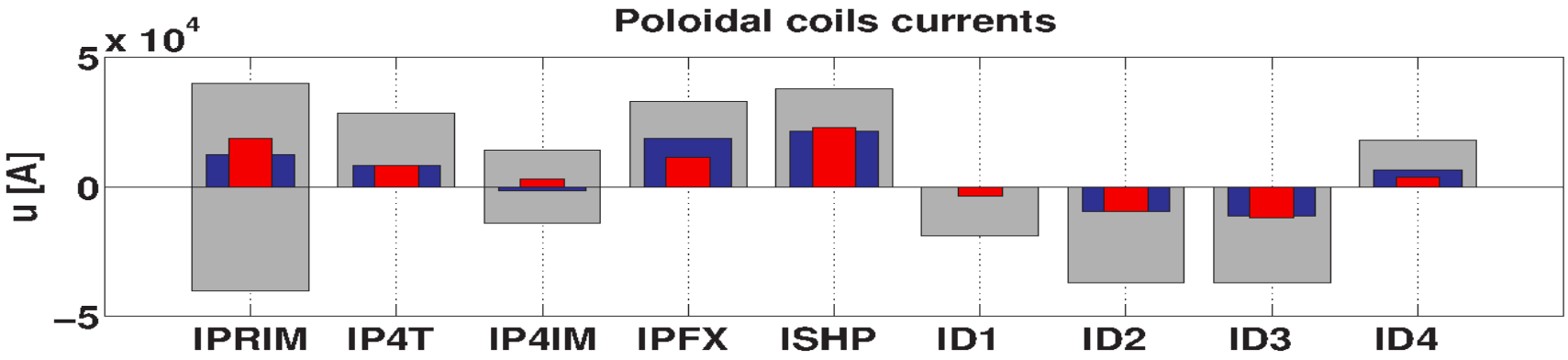

Input ranges (gray), controller output y_c (blue), allocated input u (red)

Experiment during current ramp-down *without* allocator

- ▷ X-point and strike points severely compromised at $t = 19\ s$
- ▷ Radial Inner Gap (RIG) also becomes very small

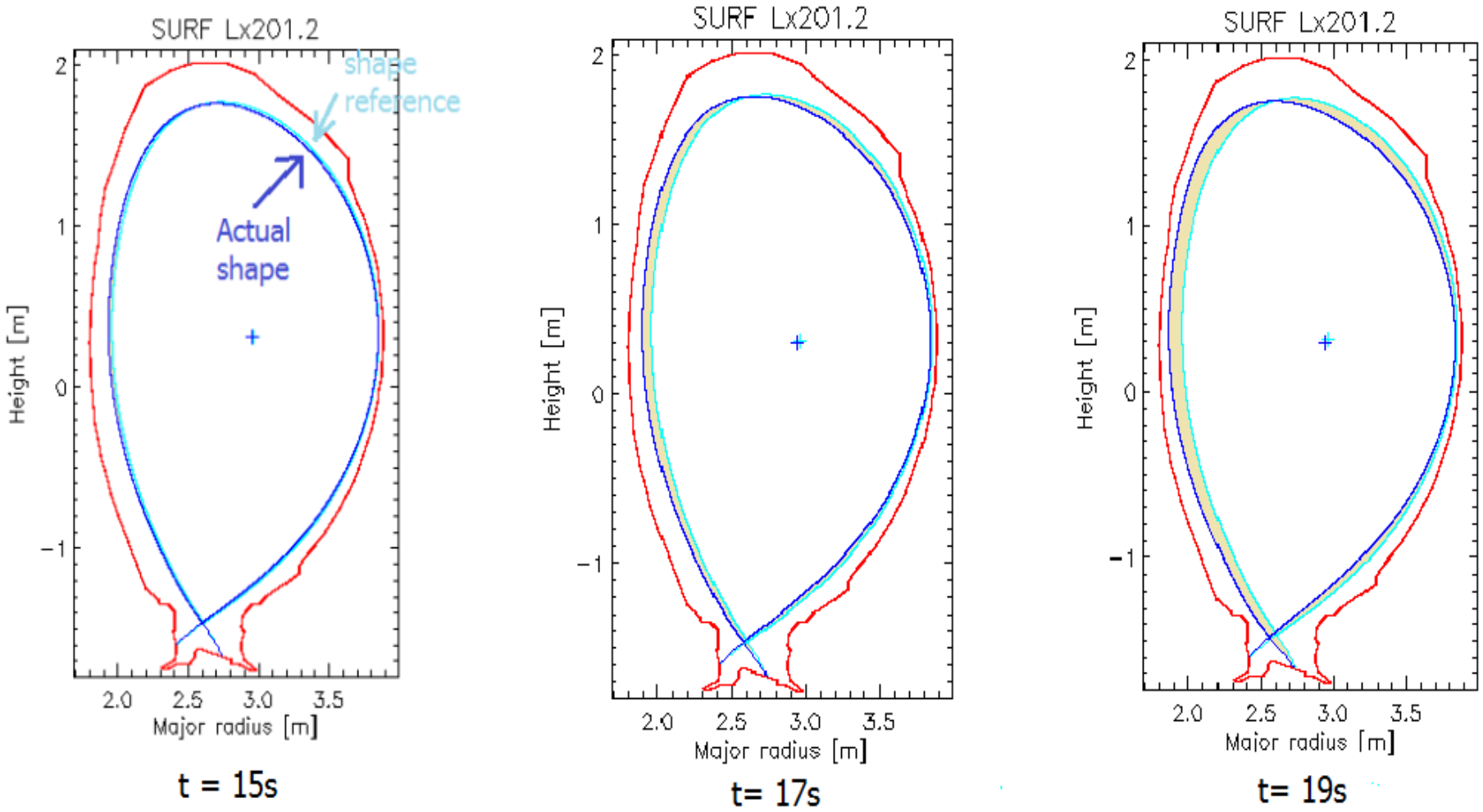

Experiment during current ramp-down *with* allocator

- ▷ X-point, strike points and RIG better behaved in the same conditions
- ▷ Shape is sacrificed in the upper part of the vessel where space is available

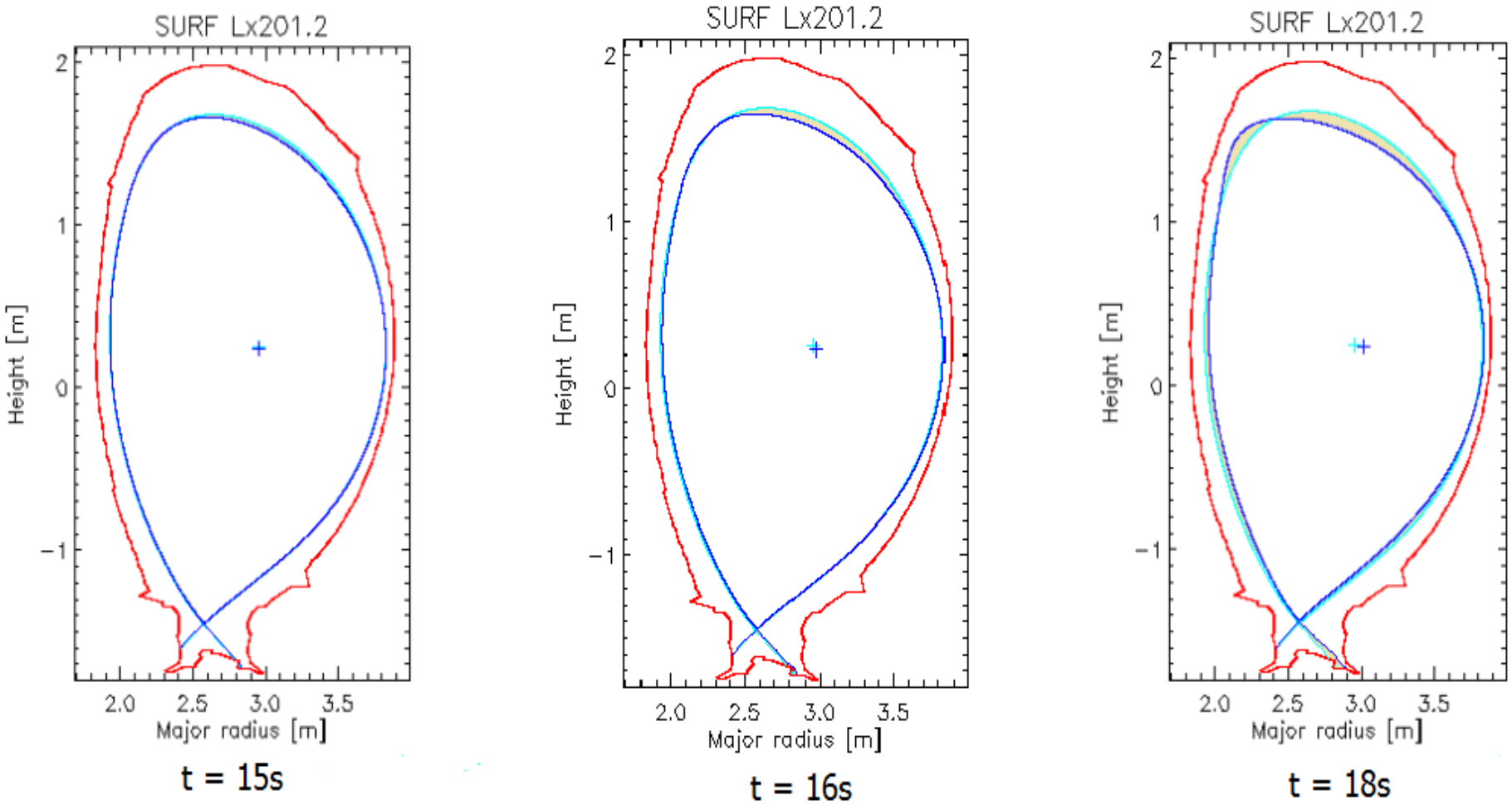

Summary of presented works with references

- ▷ A recent survey about input allocation in Johansen and Fossen [2013]
- ▷ Main works on the presented dynamic allocation paradigm:
  - First ideas on dynamic allocation vs saturation Zaccarian [2007, 2009]
  - Input-output trade-offs with JET simulations De Tommasi et al. [2011]
  - Weak allocation within a regulation framework Galeani et al. [2015], Cocetti et al. [2016]
- ▷ The presented applications are reported in:
  - Internal wrenches control in interacting robots Zambelli Bais et al. [2015]
  - FTU elongation control Boncagni et al. [2012]
  - Hybrid Electric Vehicle control Cordiner et al. [2014]
  - Satellite attitude stabilization Trégouët et al. [2015]
  - Hydrodynamic dynamometer application Passenbrunner et al. [2012]
- ▷ JET current limiit avoidance system:
  - Software implementation commissioning De Tommasi et al. [2012]
  - Closed-loop experimental results De Tommasi et al. [2013a,b]
- ▷ Additional references: Valmórbida and Galeani [2013], Serrani [2012], Cristofaro and Galeani [2014], Galeani and Pettinari [2014]

Bibliography I

L. Boncagni, S. Galeani, G. Granucci, G. Varano, V. Vitale, and L. Zaccarian. Plasma position and elongation regulation at FTU using dynamic input allocation. *IEEE Transactions on Control Systems Technology*, 20(3): 641–651, 2012.

M. Cocetti, A. Serrani, and L. Zaccarian. Dynamic input allocation for uncertain linear over-actuated systems. In *Submitted to 2016 American Control Conference*, Boston (MA), USA, July 2016.

S. Cordiner, S. Galeani, F. Mecocci, V. Mulone, and L. Zaccarian. Torque setpoint tracking for parallel hybrid electric vehicles using dynamic input allocation. *IEEE Transactions on Control Systems Technology*, 22(5): 2007–2015, 2014.

A. Cristofaro and S. Galeani. Output invisible control allocation with steady-state input optimization for weakly redundant plants. In *IEEE Conference on Decision and Control*, pages 4246–4253, Los Angeles (CA), USA, 2014. IEEE.

Bibliography II

G. De Tommasi, S. Galeani, A. Pironti, G. Varano, and L. Zaccarian. Nonlinear dynamic allocator for optimal input/output performance trade-off: application to the JET tokamak shape controller. *Automatica*, 47(5): 981–987, 2011.

G. De Tommasi, G. Ambrosino, S. Galeani, F. Maviglia, A. Pironti, G. Varano, R. Vitelli, and L. Zaccarian. A software tool for the design of the current limit avoidance system at the JET tokamak. *IEEE Transactions on Plasma Science*, 40(8):2056–2064, 2012.

G. De Tommasi, G. Ambrosino, M. Ariola, G. Calabrò, S. Galeani, F. Maviglia, A. Pironti, F.G. Rimini, A.C.C. Sips, G. Varano, R. Vitelli, L. Zaccarian, and JET-EFDA Contributors. Shape control with the XSC during plasma current ramp-up and ramp-down at the JET tokamak. In *Conference on Decision and Control*, pages 366–371, Florence (Italy), December 2013a.

G. De Tommasi, S. Galeani, S. Jachmich, E. Joffrin, M. Lennholm, P.J. Lomas, A.C. Neto, F. Maviglia, P. McCullen, A. Pironti, F.G. Rimini, A.C.C. Sips, G. Varano, R. Vitelli, L. Zaccarian, and JET-EFDA Contributors. First experimental results with the current limit avoidance system at the JET tokamak. *Fusion Engineering and Design*, 88(5):400–407, 2013b.

Bibliography III

S. Galeani and S. Pettinari. On dynamic input allocation for fat plants subject to multi-sinusoidal exogenous inputs. In *IEEE Conference on Decision and Control*, pages 4246–4253, Los Angeles (CA), USA, 2014.

S. Galeani, A. Serrani, G. Varano, and L. Zaccarian. On input allocation-based regulation for linear over-actuated systems. *Automatica*, 52:346–354, 2015.

T.A. Johansen and T.I. Fossen. Control allocation – a survey. *Automatica, to appear.*, 2013.

T.E. Passenbrunner, M. Sassano, and L. Zaccarian. Nonlinear setpoint regulation of dynamically redundant actuators. In *IEEE American Control Conference*, pages 973–978, Montreal, Canada, June 2012.

A. Serrani. Output regulation for over-actuated linear systems via inverse model allocation. In *Conference on Decision and Control*, pages 4871–4876, Maui (HI), USA, December 2012.

J.F. Trégouët, D. Arzelier, D. Peaucelle, C. Pittet, and L. Zaccarian. Reaction wheels desaturation using magnetorquers and static input allocation. *IEEE Transactions on Control Systems Technology*, 23(2):525–539, 2015.

Bibliography IV

G. Valmórbida and S. Galeani. Nonlinear output regulation for over-actuated linear systems. In *IEEE Conference on Decision and Control*, pages 4485–4490, Florence (Italy), December 2013.

L. Zaccarian. On dynamic control allocation for input-redundant control systems. In *Conference on Decision and Control*, pages 1192–1197, New Orleans (LA), USA, December 2007.

L. Zaccarian. Dynamic allocation for input-redundant control systems. *Automatica*, 45(6):1431–1438, 2009.

A. Zambelli Bais, S. Erhart, L. Zaccarian, and S. Hirche. Dynamic load distribution in cooperative manipulation tasks. In *Conference on Intelligent Robots and Systems (IROS)*, Hamburg, Germany, September 2015.