Nonlinear anti-windup design for fully actuated Euler-Lagrange systems

Federico Morabito, Andrew R. Teel, Luca Zaccarian

University of Rome, Tor Vergata (Italy)

University of California, Santa Barbara (USA)

University of Rome, Tor Vergata (Italy)

Air Force Research Laboratory
Space Vehicles Directorate
Kirtland AFB

Albuquerque (NM), May 2006

“Windup” and “Anti-windup”

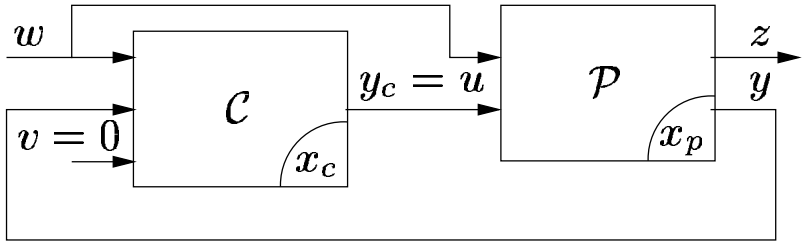

▷ Unconstrained closed-loop behavior

- desirable performance (for all signals)

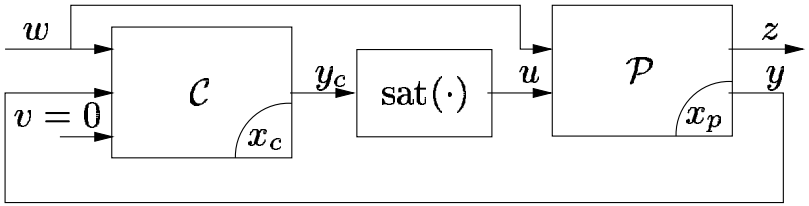

▷ Saturated closed-loop behavior

- Desirable performance for small signals
- “Windup” effect for large signals:
  - stability and/or performance loss

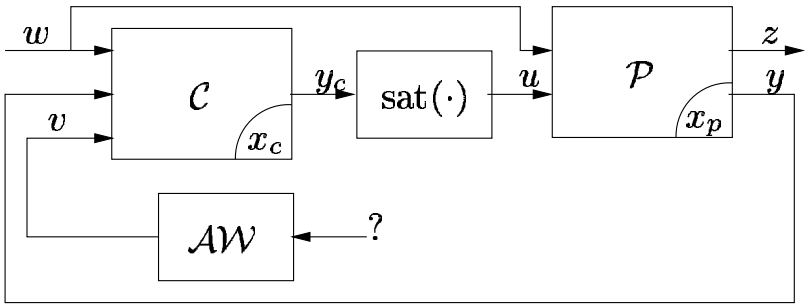

▷ “Anti-windup” augmentation goal

- Unconstrained performance for small signals
- “Anti-windup” for large signals
  - stability recovery
  - (partial) performance recovery

An illustrative example

▷ SCARA robot with limited torque/force inputs

Link	1	2	3	4
m_i	$55\ Nm$	$45\ Nm$	$70\ N$	$25\ Nm$

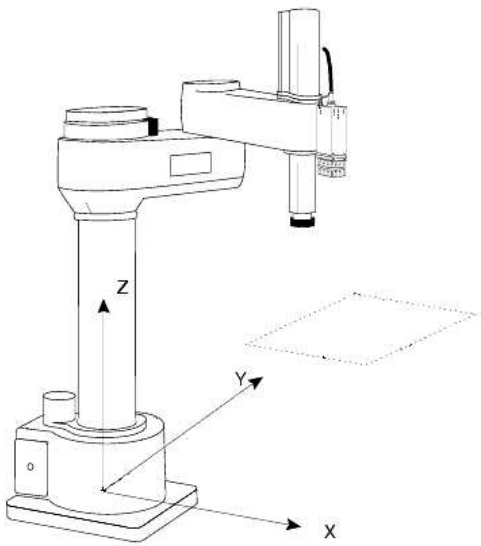

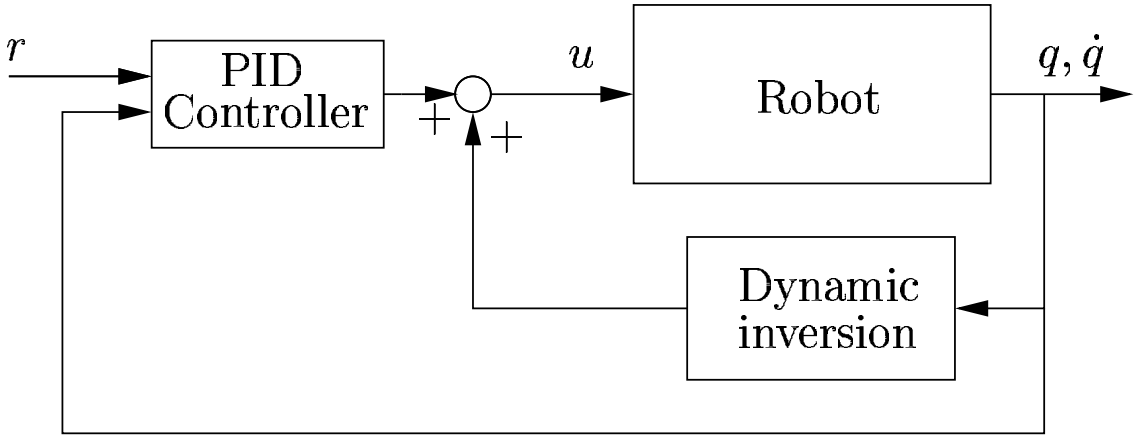

P	I	D
121	7.5	17.8
30	10	8.2
150	1	24.7
150	0.5	20.1

▷ Feedback linearizing controller+PID action (*computed torque*) induces decoupled linear performance (for small signals)

An illustrative example (cont'd)

▷ Saturation effects on the closed-loop system ($r = [6\,deg,\ -4\,deg,\ 4\,cm,\ 8\,deg]$)

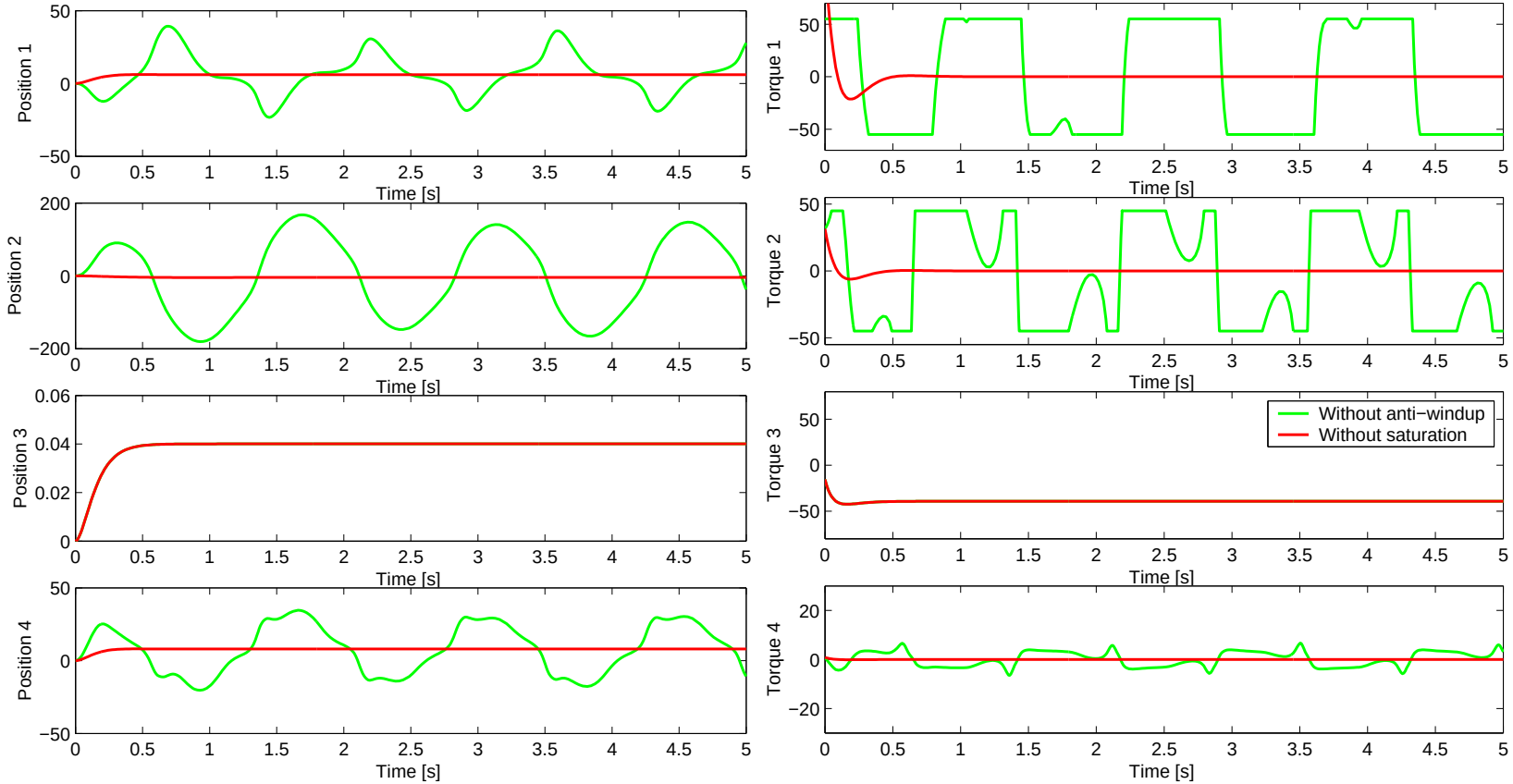

▷ How can we retain the local linear performance and avoid the stability & performance loss?

The unconstrained scheme

▷ The E-L dynamics for $L(q,\dot{q}) = T(q,\dot{q}) - V(q); T(q,\dot{q}) = \frac{1}{2}\dot{q}^T I(q)\dot{q}$

$$\frac{d}{dt}\left(\frac{\partial L(q,\dot{q})}{\partial \dot{q}}\right) - \frac{\partial L(q,\dot{q})}{\partial q} + \frac{\partial R(q,\dot{q})}{\partial \dot{q}} = \mathrm{sat}(u), \qquad (\spadesuit)$$

$$\dot{x} = f(x, \mathrm{sat}(u)), \qquad x := (q,\dot{q})$$

▷ The "original" controller dynamics

$$\begin{aligned} \dot{x}_c &= g(x_c, u_c, r) \\ y_c &= k(x_c, u_c, r) \end{aligned} \qquad (\heartsuit)$$

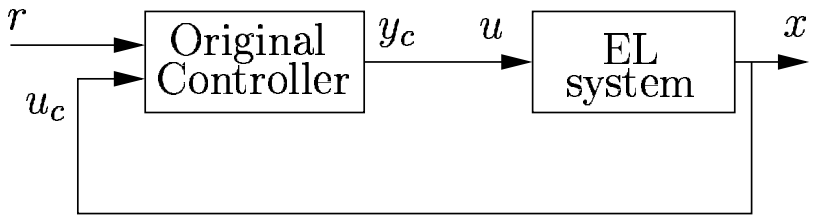

▷ The unconstrained closed-loop

$$\left.\begin{aligned} u_c &= x \\ \text{“}\mathrm{sat}(u) &= y_c\text{”} \end{aligned}\right\} \Rightarrow \dot{x} = f(x, y_c)$$

▷ The unconstrained solution is $u_u(\cdot)$, $x_u(\cdot)$

The anti-windup scheme

▷ Add extra dynamics

$$\dot{x}_e = f(x, \mathrm{sat}(u)) - f(x - x_e, y_c) \qquad (\diamondsuit)$$

▷ Condition the controller input

$$u_c = x - x_e$$

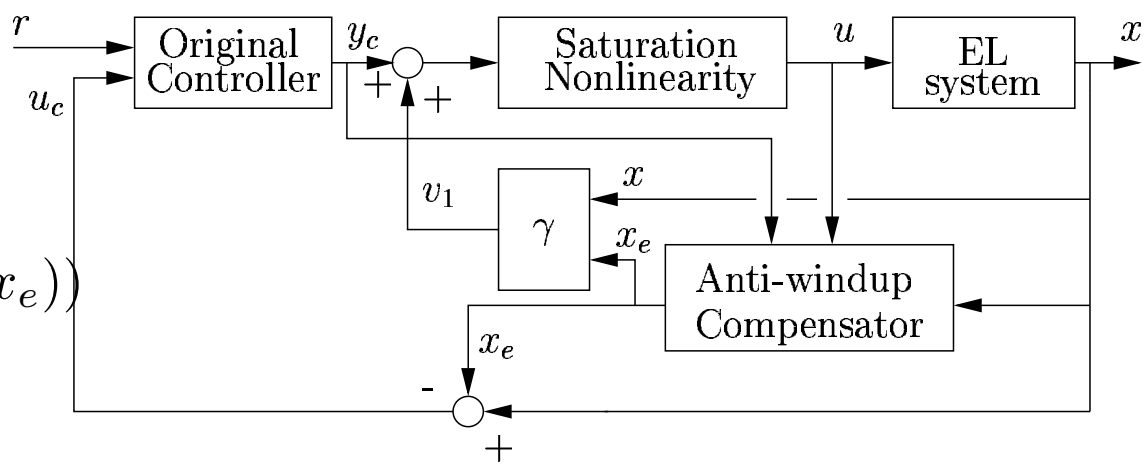

▷ Condition the plant input

$$u = \mathrm{sat}(y_c + \gamma(x, x - x_e))$$

▷ Select $\gamma(\cdot, \cdot)$ to achieve

Property GOAL: If $u_u(\cdot)$, $x_u(\cdot)$ is the unconstrained response, then

- ● whenever $x_e(0) = 0$ and $u_u(\cdot) \equiv \mathrm{sat}(u_u(\cdot))$, then $x(\cdot) \equiv x_u(\cdot)$;
- ● The system is GAS (and LES)
- ○ The performance is retained as much as possible

The proposed solution

Assumption U: The unconstrained closed-loop system is GAS and LES

▷ Select the following function

$$\begin{aligned}\gamma((q,\dot{q}),(q^*,\dot{q}^*)) \quad &:= \\ &\frac{\partial V}{\partial q}(q) - \frac{\partial V}{\partial q}(q^*) - K_G \mathrm{sat}(K_Q(q-q^*)) - K_0(\dot{q}-\dot{q}^*)\end{aligned} \qquad (\clubsuit)$$

where

- K_G, K_Q, K_0 are positive definite; K_G, K_Q diagonal
- $\sup_{q\in\mathbb{R}^n} \left|\frac{\partial V}{\partial q_i}(q)\right| + k_{Gi}m_i < m_i,\ i=1,\ldots,n$

Main Theorem: Under Assumption U, the plant (♠) controlled by (♡) and augmented with the anti-windup compensator (♢) and the selection (♣) satisfies Property GOAL

▷ Generalized results: relax Assumption U and select a different (♣)

Understanding the anti-windup solution (block diagram)

Main Theorem: Under Assumption U, the plant (♠) controlled by (♡) and augmented with the anti-windup compensator (♢) and the selection (♣) satisfies Property GOAL

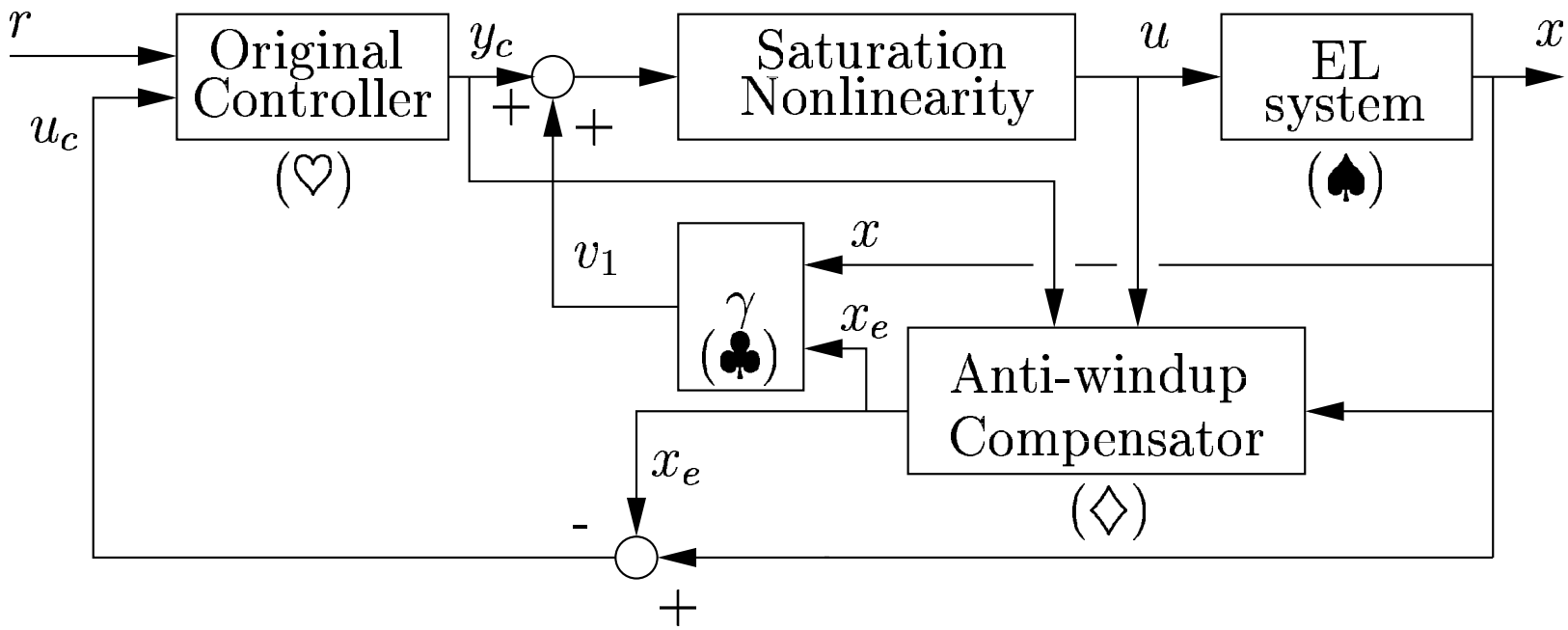

Sketch of the proof

▷ Change of coordinates: $(x, x_c, x_e) \to (e, x_c, x) := (x - x_e, x_c, x)$ the dynamics assume the cascade structure

$$\begin{array}{rl} \text{Virtual Plant} & \dot{e} = f(e, y_c) \\ \text{Unconstrained controller} & \left\{ \begin{array}{lcl} \dot{x}_c & = & g(x_c, e, r) \\ y_c & = & k(x_c, e, r) \end{array} \right. \\ \text{Actual plant} & \dot{x} = f(x, \mathrm{sat}(\gamma(x, e) + y_c)) \end{array}$$

▷ Exploit the following property:

1. $\gamma(x, x) = 0, \forall x \in \mathbb{R}^{2n}$;
2. the point $x = x^*$ is GAS+LES for the system $\dot{x} = f(x, \mathrm{sat}(\gamma(x, x^*) + u^*))$;
3. for all exponentially vanishing functions $\varepsilon_1(t),\ \varepsilon_2(t)$, the trajectories of

$$\dot{x} = f(x, \gamma(x, \mathrm{sat}(x^* + \varepsilon_1(t)) + u^* + \varepsilon_2(t)))$$

remain bounded.

Sketch of the proof (cont'd) - items 2 and 3

▷ Introduce the modified potential energy

$$V_d(q, q^*) := -V(q) + \sum_{i=1}^{n} \int_0^{q_i - q_i^*} \kappa_{gi} \sigma_i(\kappa_{qi} s) ds$$

▷ Observe that

$$\gamma(x, x^*) = -\left(\frac{\partial V_d}{\partial q}(q, q^*) - \frac{\partial V_d}{\partial q}(q^*, q^*) \right) - K_0(\dot{q} - \dot{q}^*)$$

▷ GAS and item 3: use $H_0(q, \dot{q}) := T(q, \dot{q}) + V(q) + V_d(q, q^*)$ for which

$$\begin{aligned} \dot{H}_0 &\leq \dot{q}^T \left(\mathrm{sat}(\gamma(x, x^* + \varepsilon_1) + u^* + \varepsilon_2) + \frac{\partial V_d}{\partial q}(q, q^*) \right) \\ &\leq -\beta(|\dot{q}|) + |\dot{q}||\delta(\varepsilon)| \end{aligned}$$

▷ LES: use $H_1(q, \dot{q}) := H_0(q, \dot{q}) + \epsilon \dot{q}^T I(q)(q - q^*)$

Anti-windup design for fully actuated rigid robots

Plant	$I(q)\ddot{q} + C(q,\dot{q})\dot{q} + R(q)\dot{q} + h(q) = \mathrm{sat}(u)$	(♠)
Unconstrained controller	$\begin{cases} \dot{x}_c &= g(x_c, u_c, r) \\ y_c &= k(x_c, u_c, r) \end{cases}$	(♡)
Anti − windup augmentation	$\dot{x}_e = f(x, \mathrm{sat}(u)) - f(x - x_e, y_c)$	(♢)
Stabilizing law	$v_1 = h(q - q_e) - h(q) + K_G \mathrm{sat}(K_Q q_e) + K_0 \dot{q}_e$	(♣)
Connection equations	$u = \mathrm{sat}(y_c + v_1), \qquad u_c = x - x_e$	

▷ Requirements: 1. The unconstrained closed-loop system is GAS+LES

2. $\sup_{q \in \mathbb{R}^n} |h_i(q)| + k_{Gi} m_i < m_i, \; i = 1, \ldots, n$

▷ K_G, K_Q, K_0 are free design parameters

Example 1: SCARA revisit

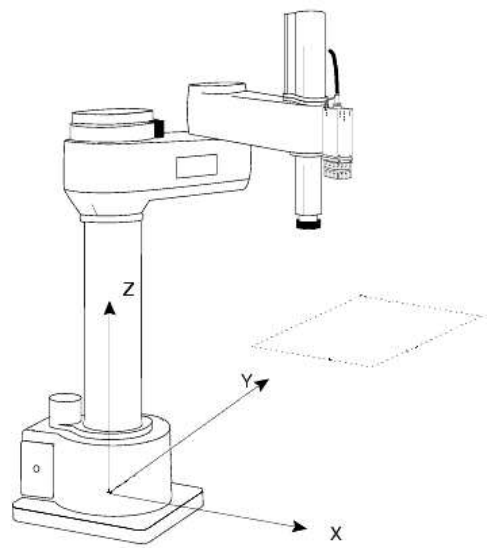

▷ Anti-windup compensation parameters:

$$K_0 = \begin{bmatrix} 75 & 0 & 0 & 0 \\ 0 & 45 & 0 & 0 \\ 0 & 0 & 20 & 0 \\ 0 & 0 & 0 & 40 \end{bmatrix}$$

$$K_G = \begin{bmatrix} 0.9 & 0 & 0 & 0 \\ 0 & 0.9 & 0 & 0 \\ 0 & 0 & 0.4 & 0 \\ 0 & 0 & 0 & 0.9 \end{bmatrix} \quad K_Q = \begin{bmatrix} 500 & 0 & 0 & 0 \\ 0 & 250 & 0 & 0 \\ 0 & 0 & 500 & 0 \\ 0 & 0 & 0 & 500 \end{bmatrix}$$

▷ Responses of perturbed dynamics (1.2 mass uncertainty + 1 Kg load) to

- Small signals: $r = [3\,deg,\ -2\,deg,\ 2\,cm,\ 4\,deg]$
- Medium signals: $r = 2 * [3\,deg,\ -2\,deg,\ 2\,cm,\ 4\,deg]$
- Large signals: $r = 50 * [3\,deg,\ -2\,deg,\ 2\,cm,\ 4\,deg]$

SCARA: small signals

▷ The reference is $r = [3\,deg,\ -2\,deg,\ 2\,cm,\ 4\,deg]$

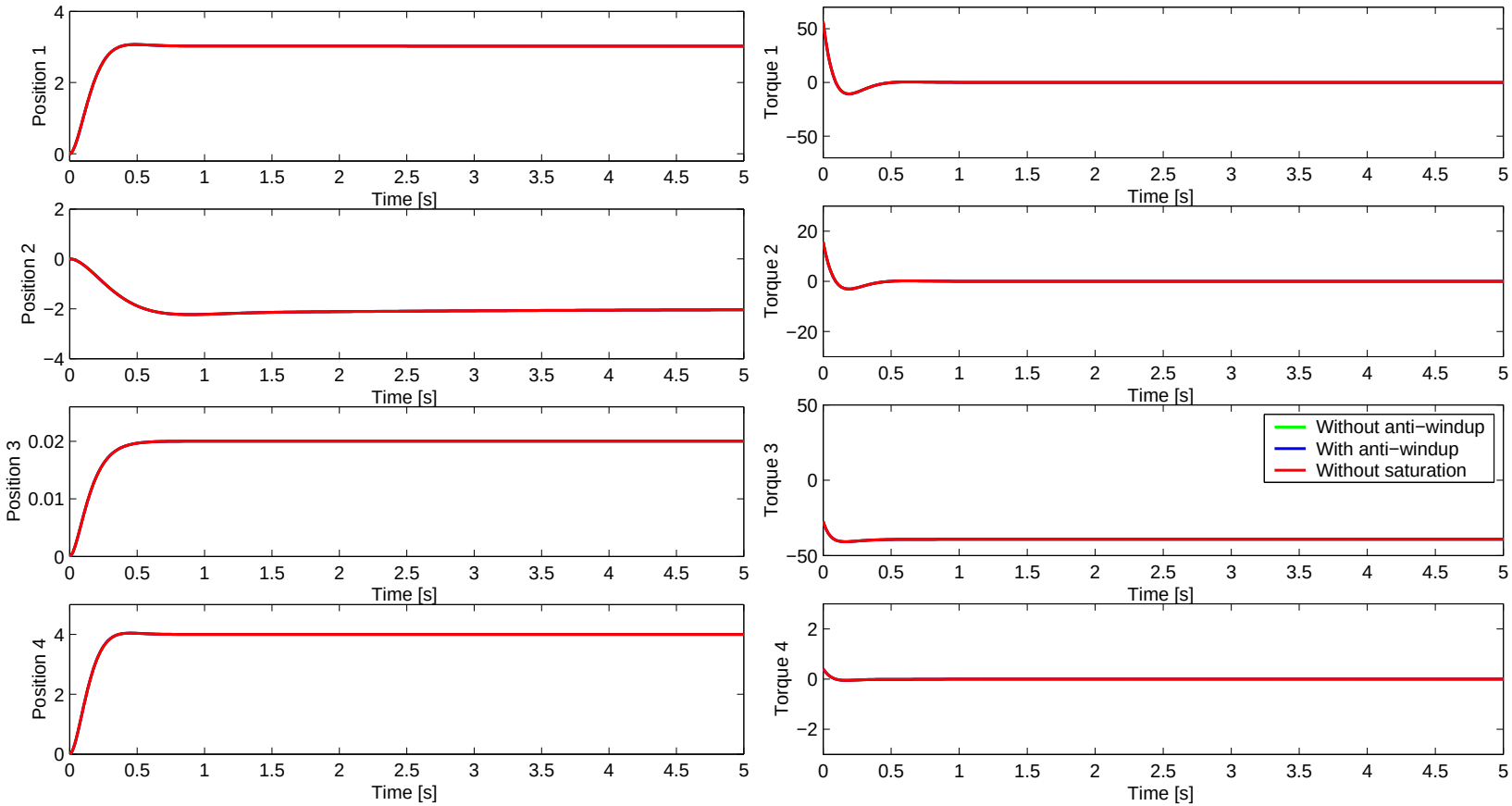

▷ All the trajectories coincide: linear decoupled responses

SCARA: medium signals (perturbed)

▷ The reference is $r = [6\,deg,\ -4\,deg,\ 4\,cm,\ 8\,deg]$

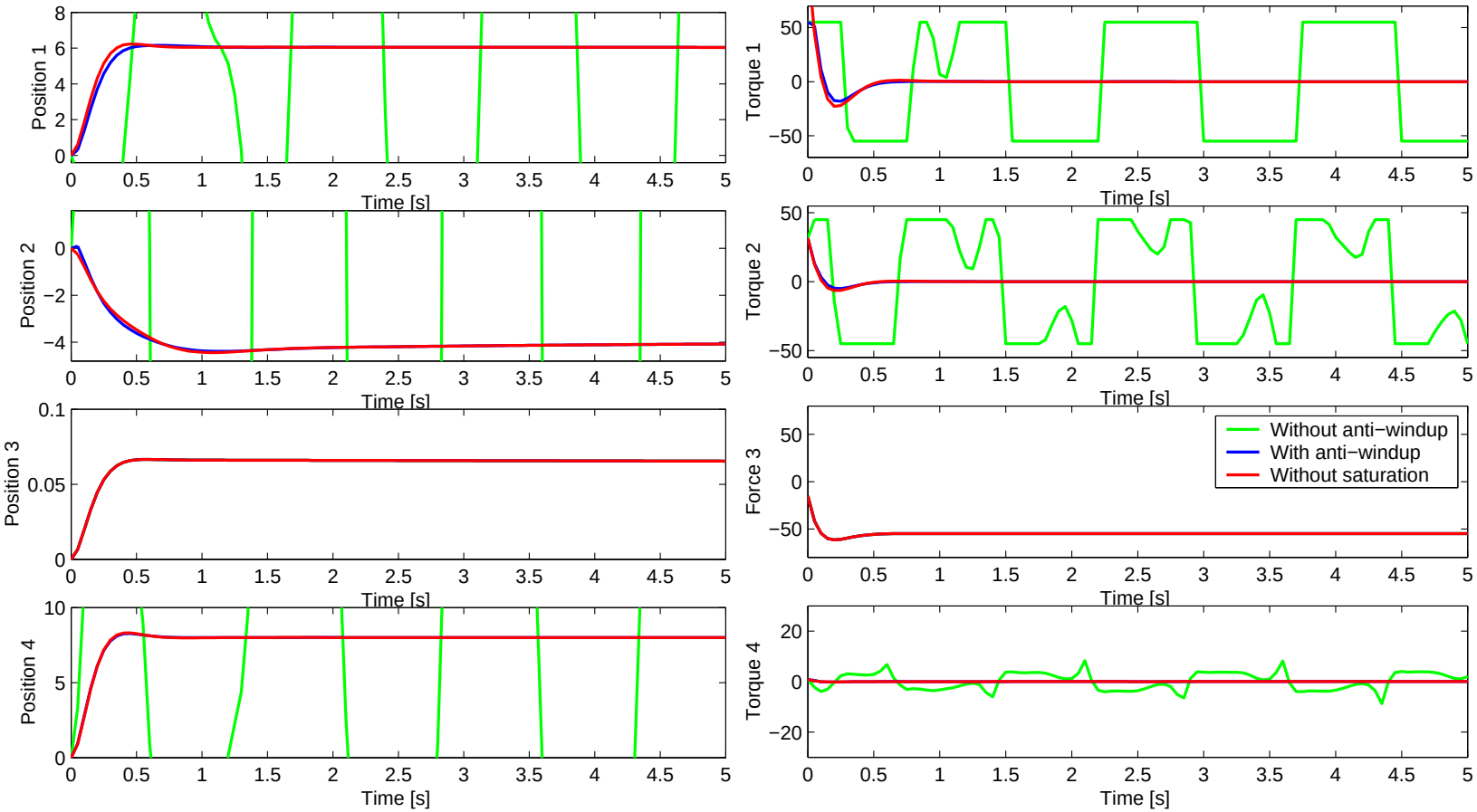

▷ Stability is recovered, performance is almost fully preserved

SCARA: large signals (perturbed)

▷ The reference is $r = [150\ deg,\ -100\ deg,\ 1\ m,\ 200\ deg]$

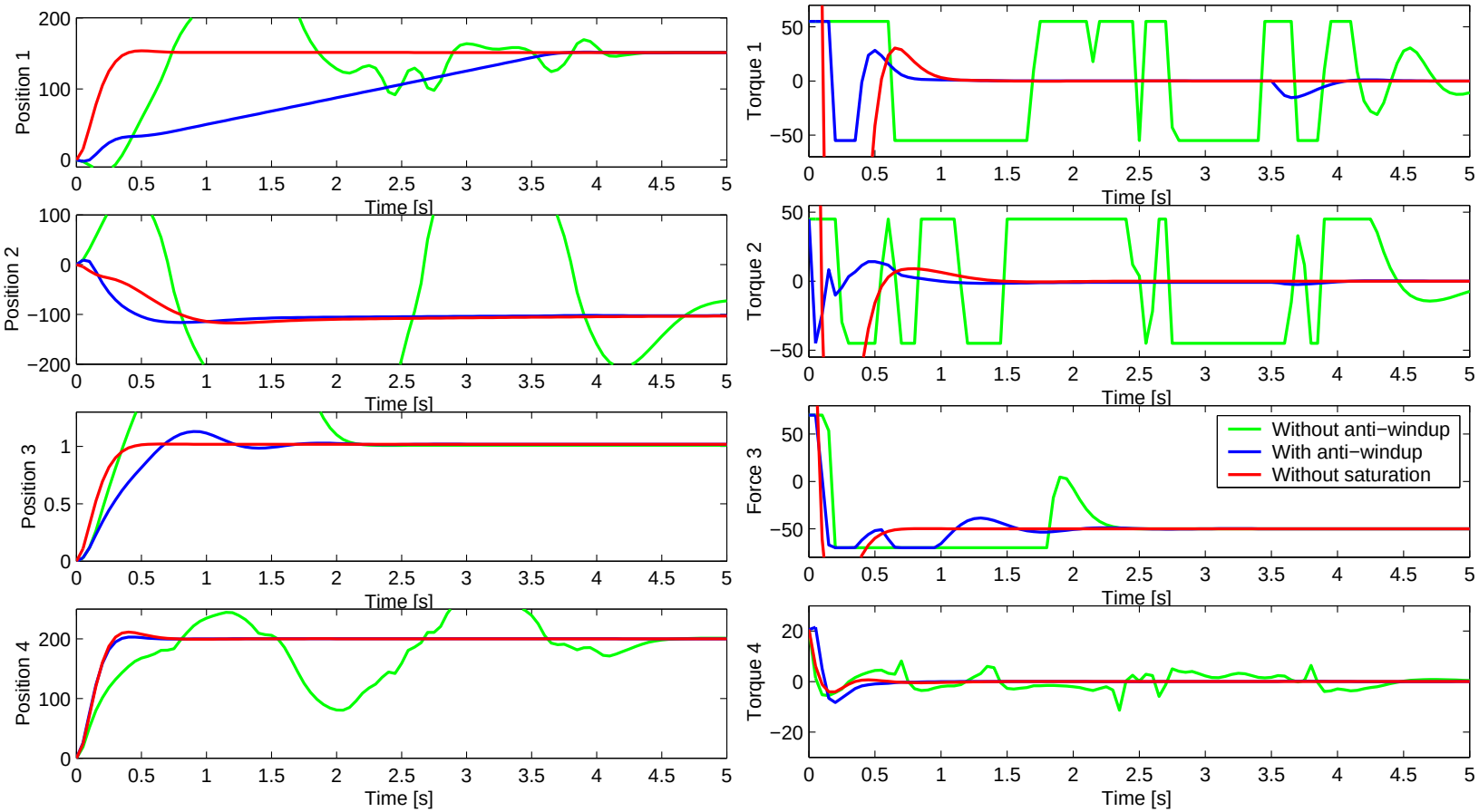

▷ Stability is retained, performance is partially lost

Example 2: PUMA

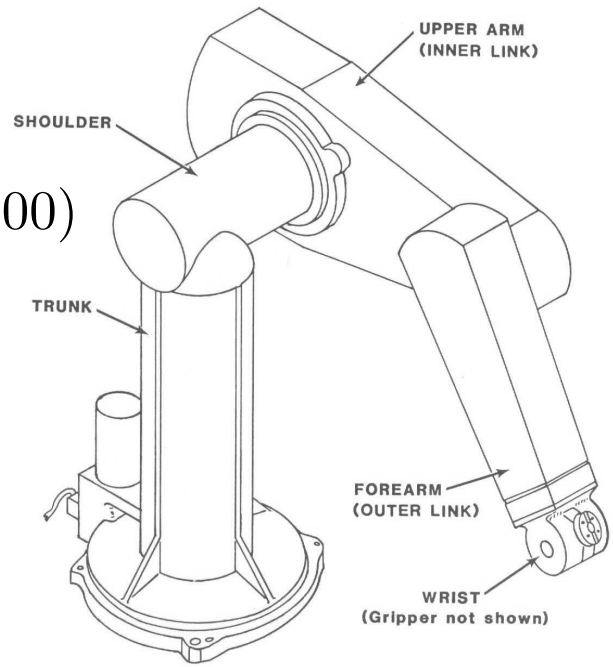

▷ Computed torque controller gains:

$$K_p = \mathrm{diag}(800, 1100, 720, 300, 250, 100)$$

$$K_i = \mathrm{diag}(10, 10, 4, 10, 9, 6)$$

$$K_d = \mathrm{diag}(50, 55, 40, 37.5, 30, 25)$$

▷ Anti-windup compensation parameters:

$$K_0 = \mathrm{diag}(80, 50, 40, 7, 4, 4)$$

$$K_G = \mathrm{diag}(0.99, 0.25, 0.85, 0.99, 0.99, 0.99)$$

$$K_Q = \mathrm{diag}(500, 800, 45, 10, 10, 10)$$

▷ Responses of perturbed dynamics (1.2 mass uncertainty + 0.5 Kg load) to

- Medium signals: $r = [5\ deg,\ 5\ deg,\ -5\ deg,\ 5\ deg,\ 5\ deg,\ 5\ deg]$
- Large signals: $r = 20 * [5\ deg,\ 5\ deg,\ -5\ deg,\ 5\ deg,\ 5\ deg,\ 5\ deg]$

PUMA: medium signals (perturbed)

▷ The reference is $r = [5\ deg,\ 5\ deg,\ -5\ deg,\ 5\ deg,\ 5\ deg,\ 5\ deg]$

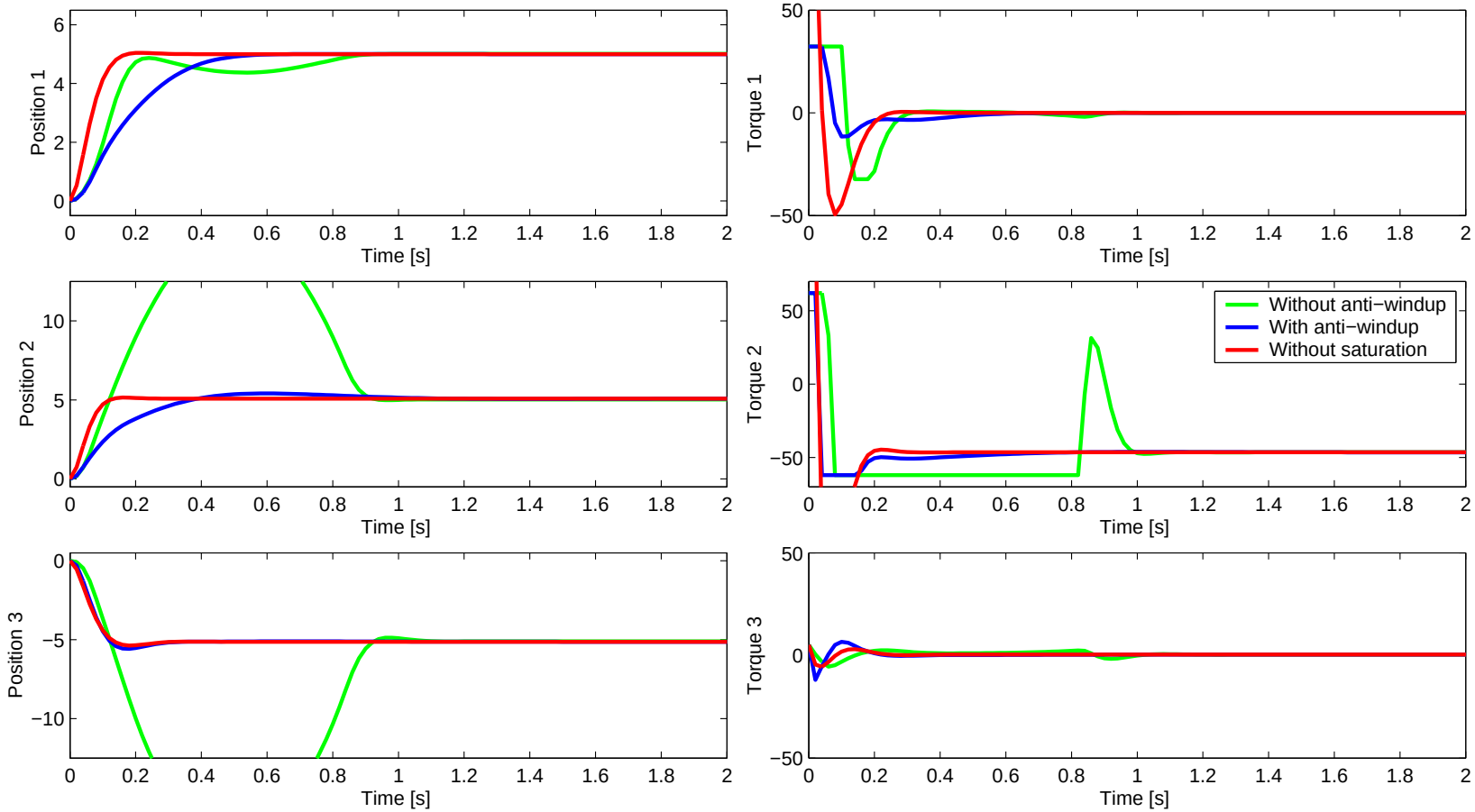

▷ The performance loss is mitigated

PUMA: large signals (perturbed)

▷ The reference is $r = [100,\ 100,\ -100,\ 100,\ 100,\ 100]\ deg$

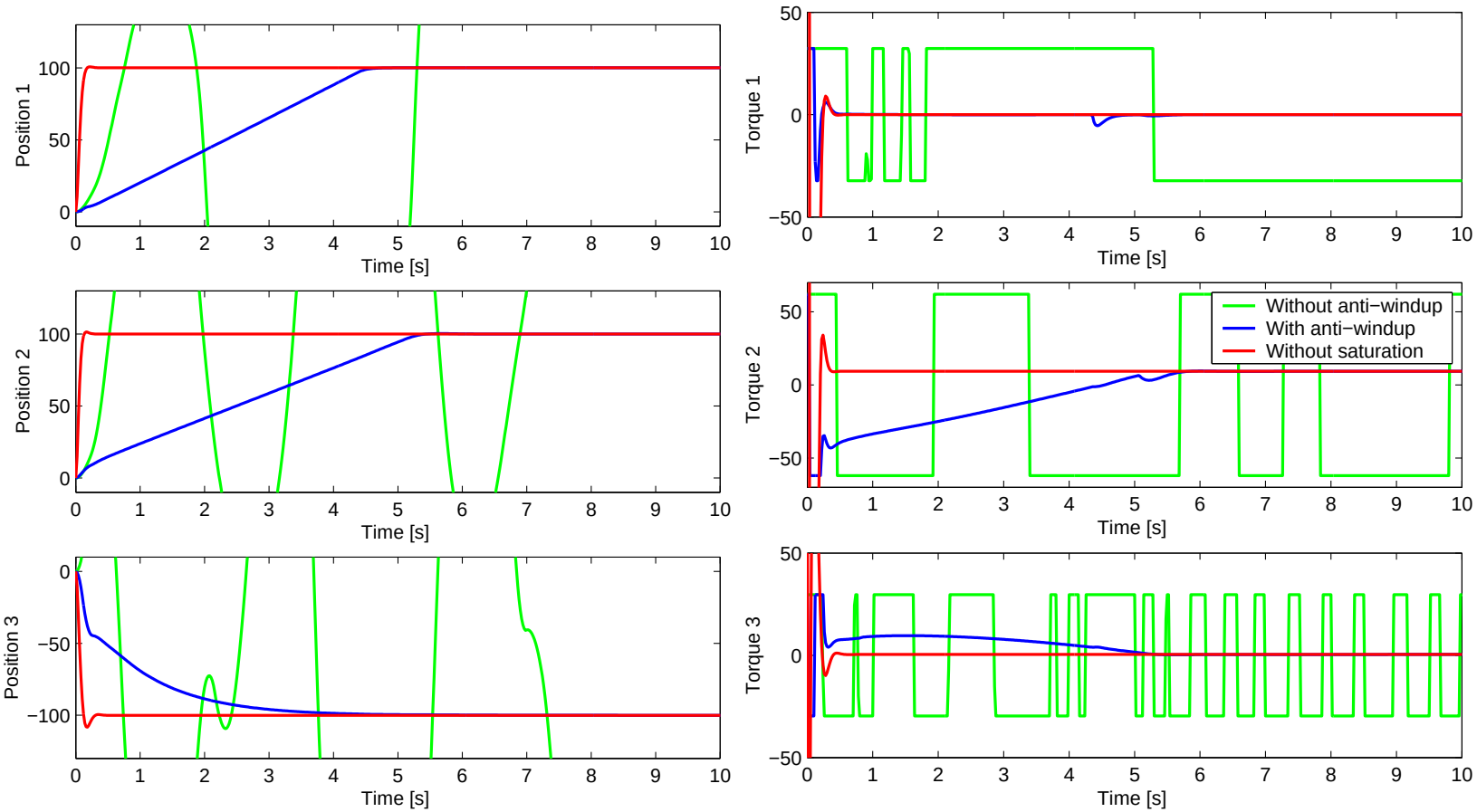

▷ Stability is recovered, performance is partially lost

Performance improvements via nonlinear selections of v_1

▷ Replace the simple PD-type law

$$v_{1old} = h(q - q_e) - h(q) + K_G \mathrm{sat}(K_Q q_e) + K_0 \dot{q}_e$$

▷ Observe that the plant dynamics are given by

$$I(q)\ddot{q} + C(q, \dot{q})\dot{q} + R(q)\dot{q} + h(q) = \mathrm{sat}(y_c + v_1)$$

large over- and under-shoots of $y_{c\ell}$ (outside the $\mathrm{sat}(\cdot)$ limits) may badly affect the plant response $\Rightarrow$ Cancel them out by selecting

$$v_1 = \mathrm{sat}(y_c) - y_c + v_{1old}$$

▷ Further improvement $\Rightarrow$ allow a nonlinear derivative term

$$v_{1new} = \mathrm{sat}(y_c) - y_c + h(q - q_e) - h(q) + K_G \mathrm{sat}(K_Q q_e) + K_d(q_e, \dot{q}_e)\dot{q}_e$$

Theorem: if $K_d(\cdot, \cdot)$ is diagonal (and regular) and $K_d(\cdot, \cdot) > K_0 > 0$ then *Main theorem* holds with v_{1new}

Selection of the nonlinear gain $K_d(\cdot,\cdot)$

▷ $q_e = q - q_{unconstr} \Rightarrow$ want to drive it to zero fast and smooth (no overshoots)

$$v_{1new} = \mathrm{sat}(y_c) - y_c + h(q - q_e) - h(q) + K_G \mathrm{sat}(K_Q q_e) + K_d(q_e, \dot{q}_e)\dot{q}_e$$

▷ Derivative term: $K_d(q_e, \dot{q}_e)\dot{q}_e$ (recall $K_d(q_e, \dot{q}_e) > 0$)

- Breaking torque if $q_{ei}\dot{q}_{ei} < 0$ (needed close to 0)
- Accelerating torque if $q_{ei}\dot{q}_{ei} > 0$ (needed, e.g., when $y_c \neq \mathrm{sat}(y_c)$)

▷ Based on a constant diagonal matrix $K_0 = \mathrm{diag}(\{k_{0i}\})$, select

$$k_{di}(q_{ei}, \dot{q}_{ei}) = \begin{cases} \gamma_E(q_{ei})k_{0i}, & if \quad q_{ei}\dot{q}_{ei} < 0 \\ k_{0i}, & if \quad q_{ei}\dot{q}_{ei} \geq 0, \end{cases}$$

where $\gamma_E(q_{ei}) := \dfrac{\mathrm{sat}_i(k_{qi}q_{ei})}{k_{qi}q_{ei}}$ is the "equivalent gain" at the i-th input

▷ Note that $K_d(q_e, \dot{q}_e)\dot{q}_e$ is Lipschitz!

SCARA: large signals (linear v_1)

▷ The reference is $r = [150\ deg,\ -100\ deg,\ 1\ m,\ 200\ deg]$

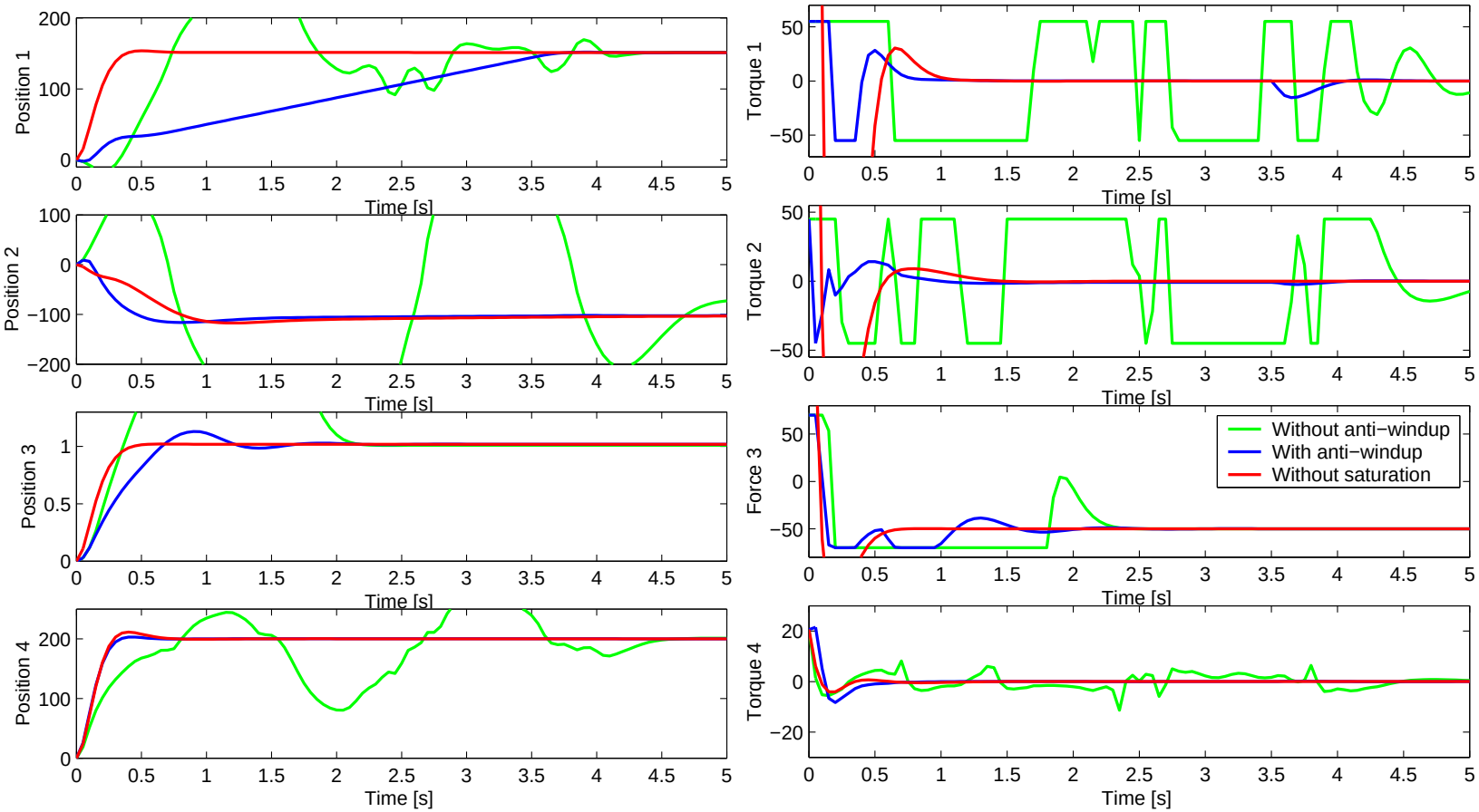

▷ Stability is retained, performance is partially lost

SCARA: large signals (nonlinear v_1)

▷ The reference is $r = [150\ deg,\ -100\ deg,\ 1\ m,\ 200\ deg]$

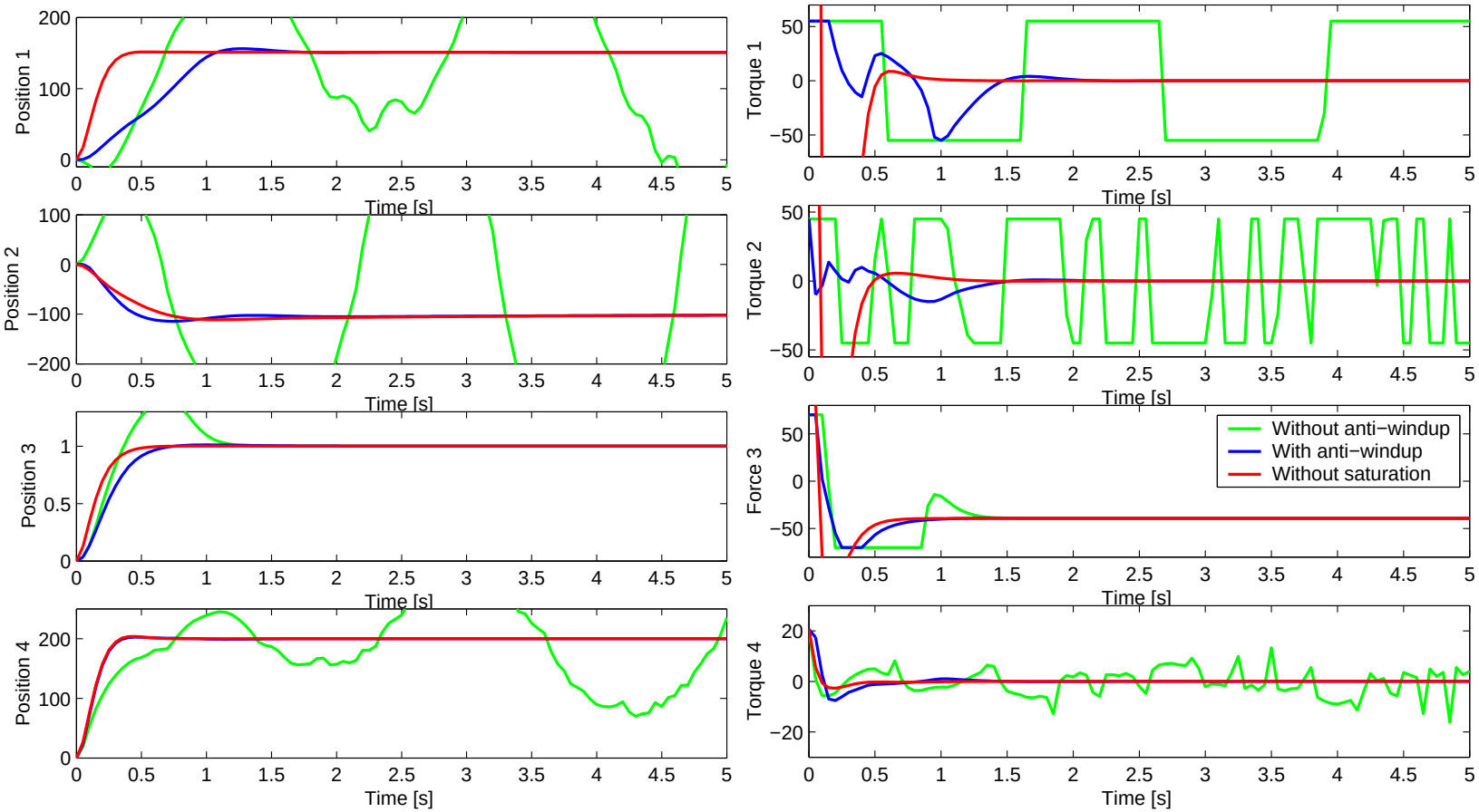

▷ Performance is dramatically improved (input authority is largely explotied)

PUMA: large signals (linear v_1)

▷ The reference is $r = [100,\ 100,\ -100,\ 100,\ 100,\ 100]\ deg$

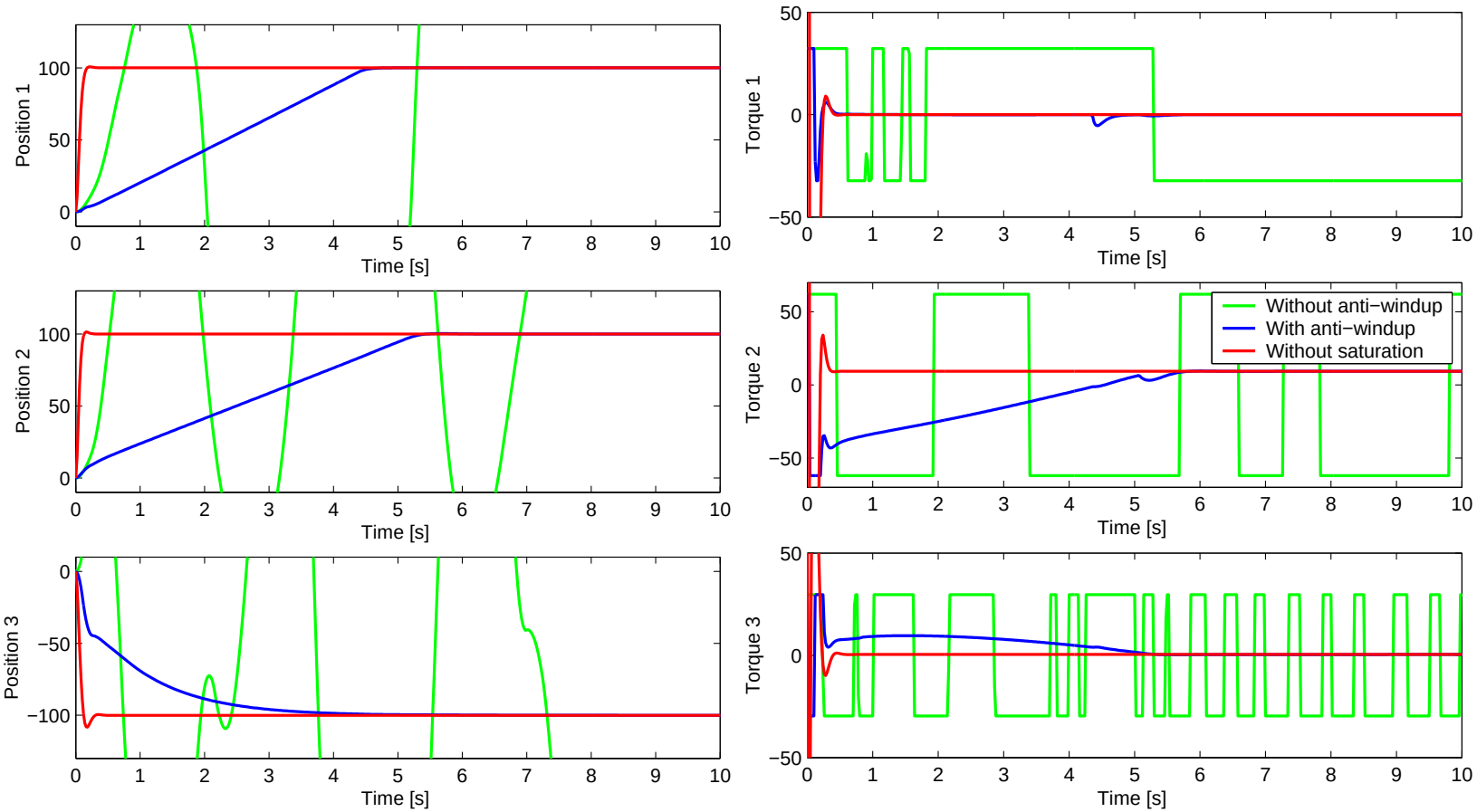

▷ Stability is recovered, performance is partially lost

PUMA: large signals (nonlinear v_1)

▷ The reference is $r = [100,\ 100,\ -100,\ 100,\ 100,\ 100]\ deg$

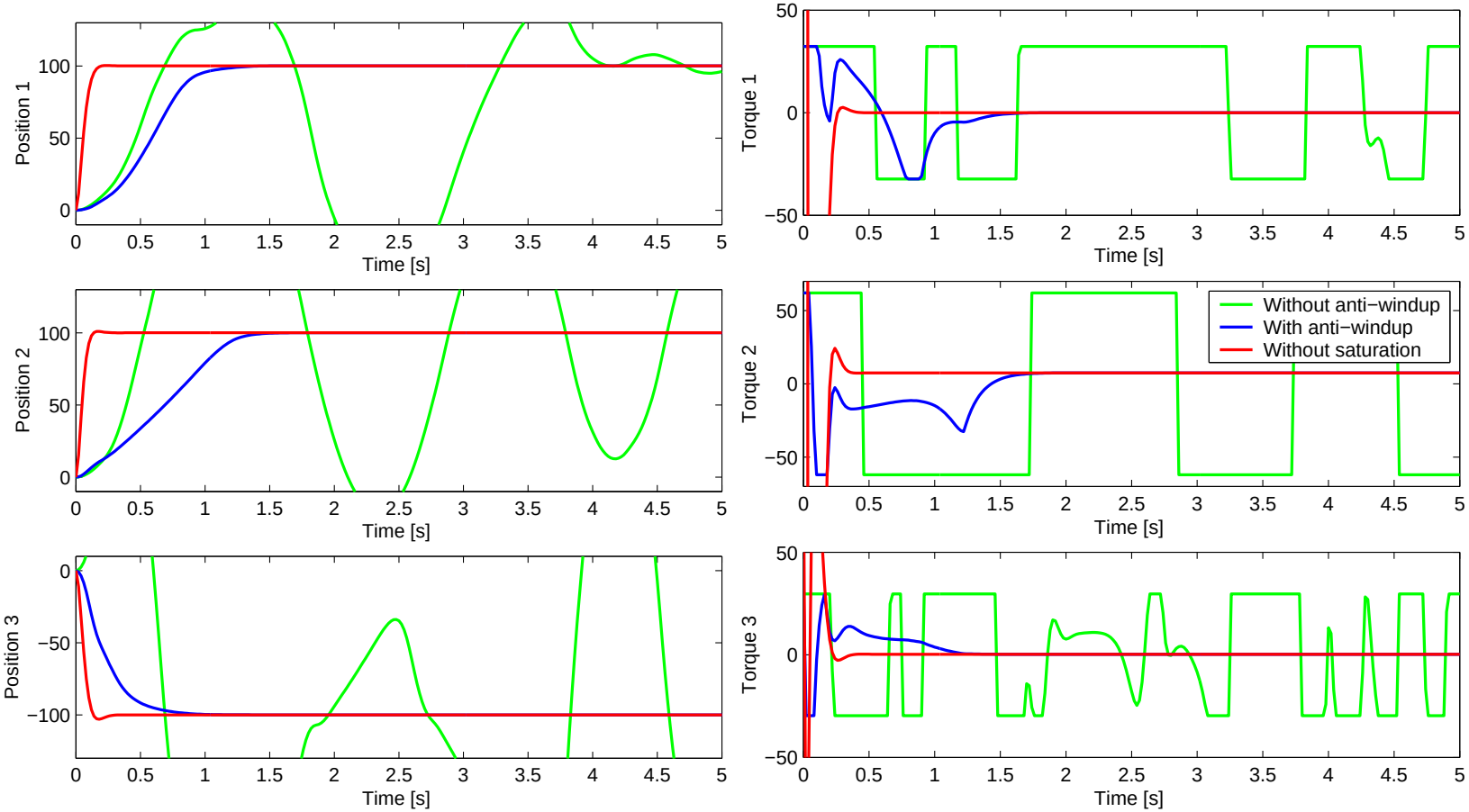

▷ Performance is dramatically improved (input authority is largely explotied)

Lending a helping hand (and fading away)

▷ The anti-windup action should not be too invasive

- the unconstrained controller is always preferred
- the anti-windup compensator should only act when needed
- after “fixing” things up, it should fade away

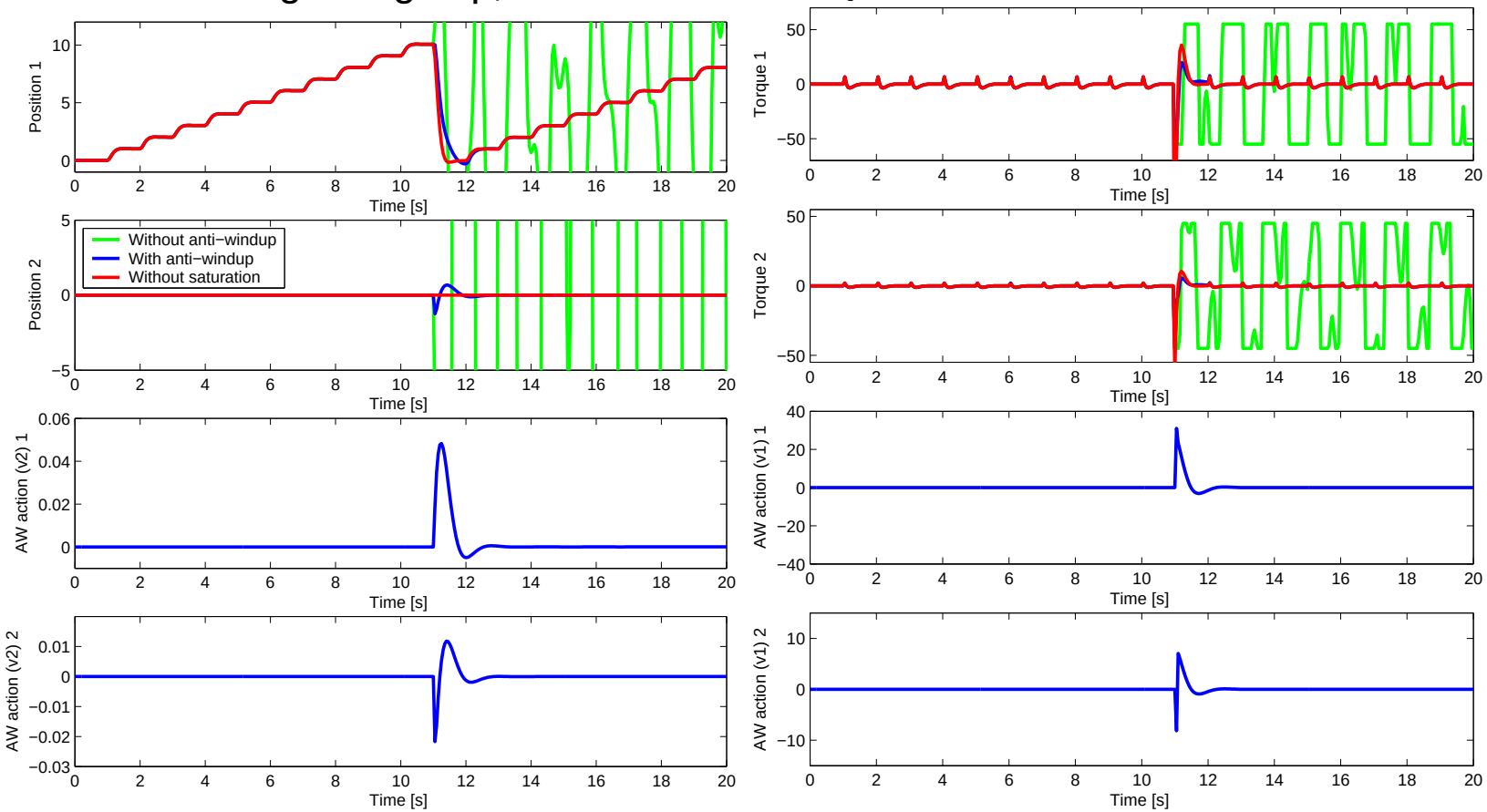

A tracking simulation

▷ SCARA robot following a reference imposing a circular motion

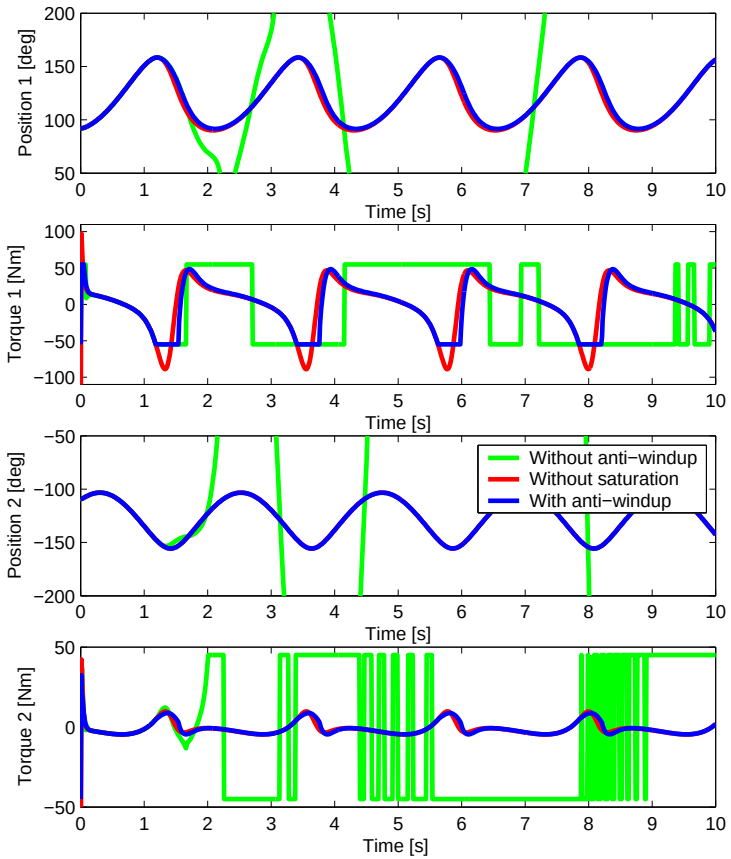

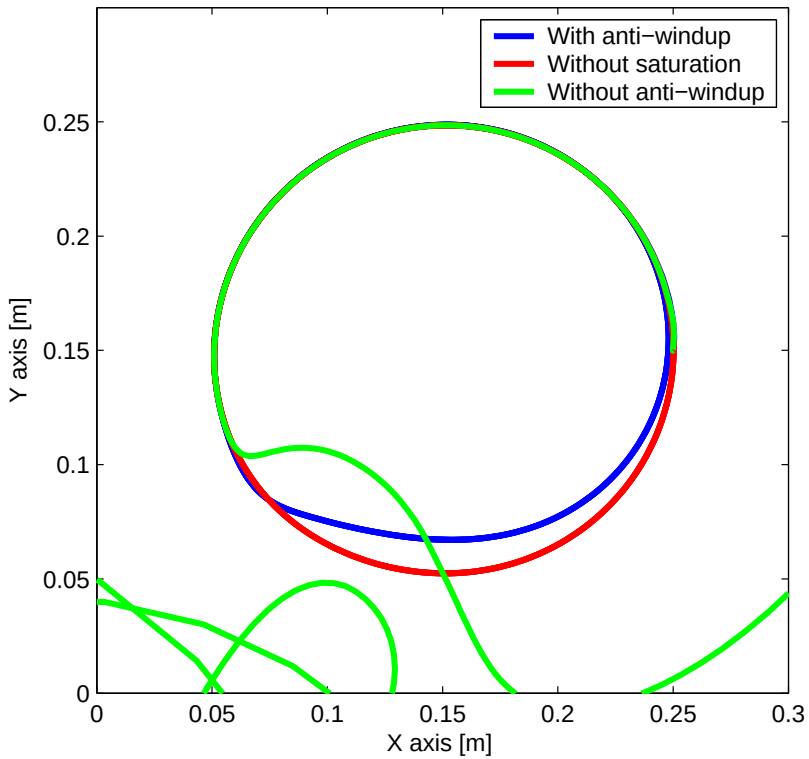

▷ The anti-windup compensator gives up a little on output performance but keeps the closed-loop well behaved (saturated controller has no clue!)

Concluding remarks

▷ Summary:

- anti-windup construction for E-L systems
- successful validated by simulations on fully actuated rigid robot arms

▷ Ramifications:

- build robots with smaller actuators
- improve the performance of existing robots

▷ Future work:

- experimental validation
- bounded (or even more sophisticated) control of satellites