Model recovery anti-windup for continuous-time rate and magnitude saturated linear plants ⋆

Fulvio Forni [a], Sergio Galeani [c], Luca Zaccarian [b,c]

[a] *Department of Electrical Engineering and Computer Science, University of Liège, 4000 Liège, Belgium.*

[b] *CNRS; LAAS; 7 avenue du Colonel Roche F-31077, Toulouse, France.*
Université de Toulouse; UPS, INSA, INP, ISAE, UT1, UTM, LAAS; F-31077, Toulouse, France.

[c] *Dipartimento di Informatica, Sistemi e Produzione, University of Rome, Tor Vergata, 00133 Rome, Italy.*

Abstract

In this paper two approaches are given for anti-windup design for nonlinear control systems with linear plants subject to limitations both in the magnitude and the rate of variation of the control input. Both approaches are based on the so-called Model Recovery Anti-windup (MRAW) framework. The first approach is built by treating the rate+magnitude saturation as a single dynamic nonlinearity, while in the second one, the dynamic compensator dynamics is extended with extra states to treat the two saturations separately. Both approaches lead to global stability with exponentially stable plants and local stability in all other cases. For both approaches, stability and performance guarantees are proven, numerical recipes are given and the relative merits are comparatively highlighted on a simulation example.

Key words: Anti-windup; magnitude saturation; rate saturation.

1 Introduction

1.1 Motivation and background

Input saturation is a relevant problem in any high performance control system where lightweight structures and/or full utilization of the available input power is required. Indeed, these phenomena can be neglected whenever one can oversize the actuators so that during normal operation the saturation limits are never reached by the controller command. Much research has been carried out in the past years to characterize and address the problem of magnitude and rate saturation. This arises whenever the actuator under consideration imposes constraints not only on the size of the requested input effort, but also on the variation of that request. This type of problem has been studied in the aerospace context where it has caused some plane crashes [6,29,34]. It also arises in plasma control systems in Tokamaks [28] and in several applications of process control. As with magnitude-only saturation, rate and magnitude saturation can be addressed by designing a controller directly considering the limitations (see, e.g., the approaches in [4,16,20,21,31,37] and references therein or even the standard formulation of Model Predictive Control, which easily incorporates rate limits in the dynamic constraints). An alternative approach, considered here, is that of adding some modifications to an existing small signal controller, which achieves a desirable performance as long as the saturation limits are not exceeded. These modifications are called *anti-windup compensation* and hinge upon the strict requirement that no modification should be enforced on the existing (so-called "unconstrained") controller unless saturation occurs.

⋆ Corresponding author S. Galeani. Tel. +39-06-72597428. Fax +39-06-72597427. Research supported in part by ENEA-Euratom and MIUR under PRIN projects.

Email addresses: `forni@disp.uniroma2.it` (Fulvio Forni), `galeani@disp.uniroma2.it` (Sergio Galeani), `zaccarian@disp.uniroma2.it` (Luca Zaccarian).

Anti-windup compensation schemes have been historically addressed in the magnitude-only saturation context, where two main approaches have been proposed to solve the problem (see also [13,32,44]): Direct Linear Anti-Windup (DLAW) for linear control systems and Model Recovery Anti-Windup (MRAW), also called "$\mathcal{L}_2$ anti-windup." In the recent literature, a number of anti-windup results have been produced addressing the design problem for rate and magnitude saturated systems. In particular, some hints about directions where the Model recovery anti-windup framework could be extended to the rate+magnitude saturation case have been given, with reference to flight control, in [1,34] (slightly generalized in [2]). Other works succeeded in extending the DLAW approaches to the rate+magnitude saturated case. These approaches mostly arise from selecting a suitable characterization of the rate+magnitude saturation nonlinearity, for which the LMI-based approach can be extended and successfully applied. For example, in the anti-windup solution of [6], a dynamic actuator model suitable for flight control applications has been used, which incorporates both magnitude and rate saturation. A similar approach has been also taken in [30,40] with reference to general linear control systems. Using similar tools, in [12,26,30,38,39], DLAW is applied by saturating the derivative of the controller output, assuming that it is available. Rate and magnitude saturation can also be seen as a special case of the nested saturation nonlinearities addressed in [3,4,31] where direct designs (in a non anti-windup fashion) are proposed. Finally, the so-called reference governor (or command-governor) approaches which rely on Receding Horizon optimal Control (RHC) ideas (see, e.g., [5,14]) can be formulated by incorporating rate saturation in the control design problem (see also [15], where RHC tools are used to directly address the rate and magnitude saturation problem).

1.2 Contribution

This paper defines and provides solutions to the rate+magnitude anti-windup problem when cast into the model recovery anti-windup framework (introduced for the magnitude-only saturation case in [35,43]). To this aim, we propose two architectures, each one leading to three solutions, as commented next. A preliminary version of this work appeared in [9]. Preliminary results in this direction had appeared in [42] and in [34] with reference to specific flight control examples, but without any characterization of the guarantees of these architectures. Moreover, in [1,2] a similar solution was given for exponentially unstable plants, assuming that it was possible to design some suitable nontrivial stabilizing laws. The attractive feature of MRAW as compared to the DLAW solutions listed above (see [12] and references therein) is that MRAW only depends on the plant dynamics and can be applied with any (possibly nonlinear) controller without any requirement about its nature, structure and properties, while the previous DLAW approaches require linearity of the controller. As compared to the nested saturations results in [3,4,31], we solve here an anti-windup type of problem, where a (possibly nonlinear) controller dynamics is pre-specified and should be retained for small signals, whereas in [3,4,31] the whole control system is designed from scratch and consists in a linear state feedback gain. One of the challenges of the approach used here is that using the MRAW framework (thereby allowing for nonlinear controllers) requires introducing a rate+magnitude saturation function which acts like an identity for small signals. This property is achieved using the discontinuous description which appeared in [12,34,41] and reported in the following equation (5).

The first architecture proposed here (in Section 3) deals with the magnitude and rate saturation altogether as a single (dynamic) nonlinearity, while the second architecture (given in Section 4) separates the saturation into the two (magnitude and rate) components and a scheme accounting for the two phenomena separately is proposed, with extra states added to the anti-windup compensator. For both architectures, the design hinges upon the selection of a possibly nonlinear stabilizer for which we propose three design strategies leading to three different anti-windup solutions for each one of the two architectures. A *global* solution (G) guaranteeing global performance guarantees at the cost of limited applicability (global bounded stabilization is known to only be possible with asymptotically null controllable with bounded controls (ANCBC) plants, namely plants without exponentially unstable modes) and possibly unsatisfactory medium signals performance. A *local* solution (L) associated with simple designs for which closed-loop properties are only guaranteed locally (these local performances are typically very desirable). A *trade-off* solution (T) where the size of the region with guaranteed performance and the convergence speed in that region are traded off using optimization techniques. For each one of the two proposed architectures, the (G), (L) and (T) solutions provide a full set of tools for the designer; the first one, (G), being suitable where global guarantees are mandatory (maybe due to safety reasons); the second one, (L), whose design is straightforward, for cases where the very large signals behavior is not a concern and it is desirable to enhance the medium signals performance of the anti-windup compensation (this provides a simple, yet very efficient solution of the anti-windup problem with some degree of performance guarantees); the last one, (T), where a trade-off is possible between large operating regions and fast performance recovery at the price of extra computational burden in the anti-windup design. For both the (T) solutions, the generalized sector condition of [8,19] is used to characterize the saturation nonlinearity.

Comparatively, the (T) solutions for the two architectures have advantages and disadvantages. Indeed, for the first

architecture (Section 3), the (T) solution is shown to induce arbitrarily large operating regions with ANCBC plants (see Proposition 1) at the cost of being computationally hard, because it requires the solution of (nonconvex) bilinear matrix inequality (BMI) constraints. Conversely, for the second architecture (Section 4), the (T) solution is not guaranteed to give semiglobal results with ANCBC plants, but its design is more computationally attractive because it requires solving (convex) linear matrix inequality (LMI) constraints. Therefore, the latter case is preferred from the design phase viewpoint although it leads to worse performance guarantees than the former one. Moreover, the LMI nature of the latter solution enables to also provide a tool for global anti-windup with optimized convergence rate (see Proposition 2). The two (T) solutions are comparatively illustrated in Section 5 where, for an example study, the arising trade-off curves are computed, and it is shown (see Figure 5) that the nonconvex design achieves better values than the convex one.

Summarizing, this paper formalizes for the first time the magnitude and rate model recovery anti-windup problem and provides several solutions applicable to rate and magnitude saturated linear plants in feedback with (possibly) nonlinear controllers. From a technical viewpoint, in addition to formalizing the problem above, the novelty and main contribution of this paper is two-fold:
(1) The $\mathcal{L}_2$ performance recovery properties of the two proposed architectures are established by characterizing the $\mathcal{L}_2$ stability of the discontinuous rate+magnitude saturation nonlinearity and showing how it can be used within the proposed schemes. This gives insightful guarantees, previously unavailable, on the medium signals performance induced by the two (L) solutions (the (L) solutions had been suggested in the past, in [34] and [42], respectively, for the two proposed architectures).
(2) For both architectures, we present here the global solutions (G) inducing global performance recovery properties and the trade-off solutions (T) commented above, which benefit from semiglobality for the first architecture and convexity for the second architecture.

The paper is organized as follows. In Section 2 the problem of interest is formally defined and the (G), (L), and (T) design goals are clarified. The two proposed architectures and the corresponding (G), (L), and (T) solutions are described in Sections 3 and 4. Finally, simulations based on a physical example are provided in Section 5 and proofs of the main results are reported in Section 6.

Notation: Given a square matrix X, define $\mathrm{He}(X) := X + X^T$. A $\star$ symbol in a matrix denotes symmetrical entries. Given a vector v, $\mathrm{diag}(v)$ denotes a diagonal matrix whose diagonal entries are the entries of v and $|v|_\infty := \max\{|v_i|\}$. The Euclidean norm and its induced matrix norm are both denoted by $|\cdot|$. The $\mathcal{L}_2$ norm of a signal is denoted by $\|\cdot\|_2$. A continuous function $\kappa(\cdot) : [0, a) \to [0, +\infty)$ is of class $\mathcal{K}$ if it is strictly increasing and $\kappa(0) = 0$; it is of class $\mathcal{K}_\infty$ if $a = +\infty$ and $\lim_{r\to+\infty} \kappa(r) = +\infty$. Given $a > 0$, $\mathcal{B}(a) := \{x : |x|^2 \le a\}$. $\mathrm{sat}_M(\cdot)$ denotes the decentralized magnitude saturation with limits M and $s \mapsto \mathrm{dz}_M(s) := s - \mathrm{sat}_M(s)$ denotes the decentralized deadzone.

2 Problem definition

Consider the following linear plant

$$\dot{x} = Ax + B_u u + B_d d, \tag{1a}$$
$$y = C_y x + D_{yu} u + D_{yd} d, \tag{1b}$$
$$z = C_z x + D_{zu} u + D_{zd} d, \tag{1c}$$

where $x \in \mathbb{R}^n$ is the plant state, $u \in \mathbb{R}^m$ is the plant control input, y is the measurement output, z is the performance output and d is a disturbance input. We assume that plant (1) is stabilizable from u.

Assumption 1 *The pair (A, B_u) is stabilizable.*

Following the standard anti-windup approach, we assume that a controller has been already designed for plant (1). , which corresponds to:

$$\dot{x}_c = f(x_c, u_c, r), \qquad y_c = g(x_c, u_c, r), \tag{2}$$

where x_c is the controller state, u_c is its measurement input and r is an external reference signal. To guarantee existence and uniqueness of solutions, we assume that both f and g are locally Lipschitz functions.

The following assumption entails the necessary property that the closed-loop between plant (1) and controller (2) is well behaved in the absence of saturation, namely with the following "unconstrained" interconnection:

$$u_c = y, \quad u = y_c. \tag{3}$$

Assumption 2 *The closed-loop between plant (1) and controller (2) via the interconnection (3) is well posed and forward complete.*

In this paper we address the so-called anti-windup augmentation problem for the interconnection (1), (2), (3) when rate and magnitude saturation affects the control input of the plant. In particular, we interconnect plant (1) and controller (2) as follows:

$$u_c = y, \quad \nu = y_c, \tag{4}$$
$$\dot{u} = \mathrm{diag}(R)\mathrm{sign}(\mathrm{sat}_M(\nu) - u), \tag{5}$$

where ν is the plant input before (rate and magnitude) saturation, $\mathrm{sat}_M(\cdot)$ is the decentralized magnitude saturation with saturation limits $M := [M_1, \ldots, M_m]$, $\mathrm{sign}(\cdot)$ is the decentralized sign function and $R := [R_1, \ldots, R_m]$ is the vector containing the rate saturation limits. In this paper, we will often use the placeholder $\mathrm{sat}_{MR}(\cdot)$ to denote the rate and magnitude saturation nonlinearity (5). In particular, we will use the expression $u = \mathrm{sat}_{MR}(\nu)$ as a shortcut to say that u is the unique [1] solution of the discontinuous dynamics (5).

The rate saturation model (5) has been used in previous work [1,12,34,41], and has the useful feature of guaranteeing that $u(t) = \nu(t)$ $\forall t \geq 0$ as long as $\nu(t) = \mathrm{sat}_M(\nu(t))$, $\dot{\nu}(t) = \mathrm{sat}_R(\dot{\nu}(t))$, $\forall t \geq 0$ and $u(0) = \nu(0)$ (namely, it acts like an identity if its input is below the saturation limits). The model correspond to a natural abstraction of the effect of the widely used safety fix of limiting the plant input increment in real-time control systems, therefore it is a mathematically sound and accurate representation of a common practical situation. Moreover, it guarantees that, if $u(0) = \mathrm{sat}_M(u(0))$, then for any $\nu(t)$, $u(t) = \mathrm{sat}_M(u(t))$ and $\dot{u}(t) = \mathrm{sat}_R(\dot{u}(t))$ for almost all t. These properties (see [12, Lemma 1] for their proof) imply that $\mathrm{sat}_{MR}(\mathrm{sat}_{MR}(y_c)) = \mathrm{sat}_{MR}(y_c)$ and that when y_c is small enough (in magnitude and rate), then $\mathrm{sat}_{MR}(y_c) = y_c$, just like in a standard saturation function. The latter property is a mandatory requirement for the statement of an anti-windup problem where the saturated closed-loop (1), (2), (4), (5) coincides with the unconstrained closed-loop (1), (2), (3) for small enough signals and the anti-windup design is aimed to resolving he negative effects experienced on the saturated closed-loop (1), (2), (4), (5) for larger signals activating the saturation nonlinearity (5). **For compact notation**, given external signals $r(\cdot)$ and $d(\cdot)$ and initial states for the plant (1) and the controller (2) the response of the unconstrained closed loop (given by (1), (2) and (3)) will be denoted by a hat $\hat{\cdot}$ over the variable of interest (*e.g.* $\hat{u}_c$ and $\hat{x}$), whereas the response of the anti-windup closed loop (given by (1), (2), (5) and the anti-windup dynamics with suitable interconnection and initial conditions) to the same external signals and initial conditions will be denoted by a bar $\bar{\cdot}$ over the variable of interest (*e.g.* $\bar{u}_c$ and $\bar{x}$). With this notation at hand, the anti-windup goal is stated as aiming to keeping small the mismatch $\bar{z} - \hat{z}$ between the anti-windup and the unconstrained performance outputs. In particular, we will measure this mismatch via its $\mathcal{L}_2$ norm $\|\bar{z} - \hat{z}\|_2$. Then, for this $\mathcal{L}_2$ norm to be finite, we require that the unconstrained plant input $\hat{u}$ converges (in an $\mathcal{L}_2$ sense) below some ε-small restriction of the saturation limits (see also [35, Remark 2.2] for the magnitude-only saturated case). To this aim, we will refer, next and in our results, to an ε-restricted saturation $\mathrm{sat}_{MR(1-\varepsilon)}(\cdot)$ denoting a rate and magnitude saturation rescaled by the factor $(1-\varepsilon) \in [0, 1]$, namely such that its magnitude and rate saturation levels are, respectively, given by $(1-\varepsilon)M$ and $(1-\varepsilon)R$. We formally state next the problem addressed and solved in this paper.

Problem 1 *Given the plant-controller pair (1), (2) and the magnitude and rate saturation in (5), design a dynamic compensator which only uses measurements from the controller signals and injects modifications at the controller input and output and whose interconnection to the plant-controller pair (1), (2) guarantees (at least one of) the following properties:*

(G) (global anti-windup) for any scalar $\varepsilon \in (0, 1)$ and for any pair $(r(\cdot), d(\cdot))$ such that $\mathrm{dz}_{M(1-\varepsilon)}(\hat{u}) \in \mathcal{L}_2$ and $\mathrm{dz}_{R(1-\varepsilon)}(\dot{\hat{u}}) \in \mathcal{L}_2$, there exists a class $\mathcal{K}_\infty$ function $\gamma(\cdot)$ such that

$$\|\bar{z} - \hat{z}\|_2 < \gamma\left(\left\| \begin{bmatrix} \mathrm{dz}_{M(1-\varepsilon)}(\hat{u}) \\ \mathrm{dz}_{R(1-\varepsilon)}(\dot{\hat{u}}) \end{bmatrix} \right\|_2\right); \tag{6}$$

[1] An exact description of the discontinuous dynamics (5) would require the use of set valued maps and differential inclusions. However to keep the discussion simple we will abuse notation here and assume that the $\mathrm{sign}(\cdot)$ function in (5), when evaluated at zero, returns the correct value to guarantee existence and uniqueness of solutions (see [41, Lemma B.1, p. 145]).

(L) (local anti-windup) there exists $\rho > 0$ and a class $\mathcal{K}$ function $\gamma(\cdot)$ such that inequality (6) holds for any scalar $\varepsilon \in (0,1)$, for any initial condition such that $\|(\hat{x}(0), \hat{x}_c(0))\| < \rho$ and for any pair $(r(\cdot), d(\cdot))$ such that $\|\mathrm{dz}_{M(1-\varepsilon)}(\hat{u})\|_2 < \rho$ and $\|\mathrm{dz}_{R(1-\varepsilon)}(\dot{\hat{u}})\|_2 < \rho$;

(T) (trade-off: regional anti-windup with exponential recovery) for any scalar $\varepsilon \in (0,1)$ and for any pair $(r(\cdot), d(\cdot))$ such that $\mathrm{dz}_{M(1-\varepsilon)}(\hat{u})$ and $\mathrm{dz}_{R(1-\varepsilon)}(\dot{\hat{u}})$ have compact support[2] $[0,T]$, if the state of the anti-windup compensator for $t = T$ belongs to a suitable region $\mathcal{R}$ (possibly depending on $\hat{y}_c(T)$), then $\bar{z}(t) - \hat{z}(t)$ converges to zero exponentially fast with convergence rate α.

Remark 1 Note that we don't ask for any stability or convergence property in Assumption 2. Although guaranteed by essentially any reasonable choice of the given controller (2), these properties are actually not required to state our main results which only require that the anti-windup response $\bar{z}$ converges in an $\mathcal{L}_2$ sense (see [33] for a discussion about how finite $\mathcal{L}_2$ norms relate to asymptotic convergence) to the unconstrained response $\hat{z}$ whenever the right hand side of (6) is finite. Clearly, saturation will impose some limits on the trackable responses, *i.e.* on the unconstrained responses leading to a finite value of the right hand side of (6). In particular, while items G and L only require that the unconstrained response plant input $\hat{u}$ spends a finite amount of energy outside the saturation bounds (recall that $\mathrm{dz}(s) = s - \mathrm{sat}(s)$ and that the $\mathcal{L}_2$ norm of a signal corresponds to its energy), which is mostly a necessary assumption to satisfy $\|\bar{z} - \hat{z}\|_2 \in \mathcal{L}_2$, item T requires a stronger property that after a finite time T, $\hat{u}$ remains within the saturation bounds, namely that large values of $\hat{u}$, $\dot{\hat{u}}$ produced by the unconstrained appear only during the initial transient. An example of this behavior is an unconstrained step response where the transient causes plant input peaks beyond the saturation bounds but the steady-state input remains within the bounds. ◦

The difference between the requirements in items (G) and (L) of Problem 1 is that in item (G) the performance degradation (as measured by $\|\bar{z} - \hat{z}\|_2$) is guaranteed to be bounded for any response such that $\|\mathrm{dz}_{M(1-\varepsilon)}(\hat{u})\|_2$ and $\|\mathrm{dz}_{R(1-\varepsilon)}(\dot{\hat{u}})\|_2$ are finite (possibly arbitrarily large), whereas in item (L) this performance degradation is only guaranteed to be bounded if $\|\mathrm{dz}_{M(1-\varepsilon)}(\hat{u})\|_2$, $\|\mathrm{dz}_{R(1-\varepsilon)}(\dot{\hat{u}})\|_2$ and the initial conditions are sufficiently small. It will be shown in the rest of the paper that it is possible to come up with solutions to to item (G) at the price of sacrificing local performance. Conversely, solutions to item (L) will induce better local performance at the price of not giving guarantees for larger signals. Hence, in order to identify more desirable solutions (achieving a trade-off between the merits and the pitfalls of the two extreme solutions cited above) item (T) of Problem 1 is introduced, where an explicit quantification is given of both the guaranteed (exponential) convergence rate and of the size of the region of the state space of the anti-windup compensator from which such a convergence rate is achieved.

3 Plant-order anti-windup architecture

A first architecture that we propose to solve Problem 1 is carried out along the same lines as those in [1,2,34], where a dynamical system reproducing the dynamics of the plant (1) from the control input u to the measurement output y is inserted in the closed-loop to generate the mismatch between the actual plant behavior and the virtual behavior in the absence of saturation. In particular, this system, called "anti-windup compensator" corresponds to the following dynamics:

$$\dot{x}_{aw} = Ax_{aw} + B_u(u - y_c) \tag{7a}$$
$$y_{aw} = C_y x_{aw} + D_{yu}(u - y_c) \tag{7b}$$
$$z_{aw} = C_z x_{aw} + D_{zu}(u - y_c), \tag{7c}$$

The anti-windup compensator (7) is to be connected to the saturated plant (1), (5) and the controller (2) via the following anti-windup interconnection equations:

$$u_c = y - y_{aw}, \quad \nu = \mathrm{sat}_{MR(1-\varepsilon)}(y_c) + v_1, \tag{8}$$

where the signal v_1 is a degree of freedom left by the compensation scheme to guarantee that the actual plant response $\bar{x}$ converges to the virtual response $\hat{x}$ corresponding to the absence of the saturation effects. A block diagram of the overall anti-windup scheme is represented in Figure 1. Note that, according to (8), the controller output is passed through an ε-restricted copy of (5) before being fed to the saturated plant (5), (1). Note also that we assume that

[2] A function $f(\cdot)$ has support $[0,T]$ if $f(t) = 0$ for $t \notin [0,T]$. This requirement imposes that the unconstrained response eventually comes back and remains within the ε-restricted saturation limits.

the plant input after saturation u is accessible, but one could as well compute it based on the model (5) and then feed it to the saturated plant (5), (1), indeed it has been highlighted in Section 2 that the second saturation acts like an identity.

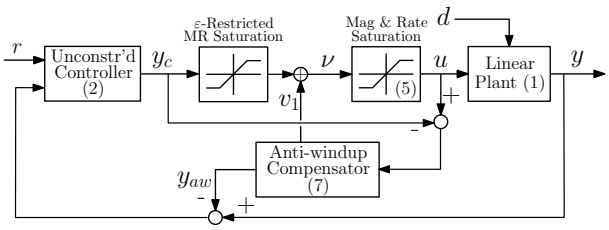

Fig. 1. Plant-order anti-windup architecture.

The following theorem, whose proof is reported in Section 6.1, establishes three solutions to Problem 1, hinging upon three designs of the stabilizing signal v_1 in (8).

Theorem 1 *Consider the anti-windup closed-loop (1), (2), (5), (7), (8). Under Assumptions 1 and 2, the controller state and output responses* $(\bar{x}_c, \bar{y}_c)$ *coincide with the unconstrained controller state and output responses* $(\hat{x}_c, \hat{u})$*. Moreover the following holds:*

(G) If A is Hurwitz, then the selection $v_1 = 0$ solves the global anti-windup problem (G) in Problem 1.
(L) Selecting v_1 as any stabilizing linear state feedback for $\dot{x}_{aw} = Ax_{aw} + B_u v_1$ solves the local anti-windup problem (L) in Problem 1.
(T) Selecting $v_1 = Kx_{aw}$, where K is a feasible solution to the following BMI problem in the variables $P = P^T > 0$, K, H, $\alpha > 0$, $\frac{1}{\beta} > 0$, $U_M > 0$ diagonal

$$\frac{1}{\beta} I > P \tag{9a}$$

$$0 > \mathrm{He}\begin{bmatrix} P(A + \alpha I + B_u K) & -PB_u \\ U_M(K - H) & -U_M \end{bmatrix} \tag{9b}$$

$$0 \leq \begin{bmatrix} \varepsilon^2 R_i^2 P & \star \\ [K(A + B_u K)]_i & 1 \end{bmatrix}, i = 1, \ldots m, \tag{9c}$$

$$0 \leq \begin{bmatrix} \varepsilon^2 M_i^2 P & \star \\ [H]_i & 1 \end{bmatrix}, i = 1, \ldots m, \tag{9d}$$

(where $[Z]_i$ denotes the i-th row of the matrix Z) solves the local anti-windup *(L) and the* trade-off anti-windup *(T) problems in Problem 1 with exponential bound α in the guaranteed region $\mathcal{B}(\beta)$, namely a ball of size β.*

The solution at *item (G)* of Theorem 1 corresponds to a generalization of the so-called IMC anti-windup solution (which is a well known anti-windup solution in the magnitude-only saturation case – see e.g., [24]). This solution relies on the exponentially decaying modes of the plant (whose matrix A is Hurwitz) and is also well known for its global exponential stability guarantees in spite of poor performance when used for lightly damped plants. Also in [30] an IMC-like structure is highlighted within a Riccati equation-based anti-windup scheme for rate-saturated systems. The difference with respect to our approach is that in [30] the rate-limited closed-loop is transformed to a linear closed-loop with magnitude saturations, whereas here the IMC nature of the solution is designed based on feeding the plant input mismatch (caused by both the magnitude and rate saturation effects) into a model of the plant and relying on the exponentially stable modes of the plant for the convergence to zero of the output mismatch (see, [17] and [44, §6.5.1]). The same comment applies to the solution at item (G) of Theorem 2 as well. The solution at *item (L)* corresponds to a practical approach to the problem, wherein the saturation effects are completely disregarded in the design of v_1. This item establishes that any such solution will guarantee the local statement (L) in Problem 1, however there's no guarantee on the size of the region from which the unconstrained performance can be recovered by the compensated system. The advantages of this solution are simplicity and local performance. The main disadvantage is the lack of stability guarantees for large signals. Nevertheless, from a practical viewpoint, the property that $(\bar{x}_c, \bar{y}_c) \equiv (\hat{x}_c, \hat{u})$ established at the top of the theorem ensures that the controller states are

well-behaved and for all the cases where the windup phenomenon is made worse by undesirable dynamics generated by the saturated interconnection, this solution leads to extremely desirable results. For example, it was adopted in [34] and we establish here its formal properties in terms of local $\mathcal{L}_2$ performance recovery as stated in item (L) of Problem 1. The last solution at *item (T)* overcomes the limitations of the previous two approaches by enforcing a guaranteed exponential decay of the performance output mismatch $\bar{z} - \hat{z}$ while ensuring that this bound holds in a guaranteed region. The trade off in the BMIs (9) is between α (associated with the decaying exponential bound) and β (associated with the size of the guaranteed region). A last comment pertains to the BMI nature of the conditions (9), which makes them not straightforward to solve in general. In Section 5 we discuss a case study where using the branch-and-bound solver `bmibnb` in YALMIP [27] and the commercial package PENBMI [23] it is possible to derive a solution. Alternative approaches are also possible, such as the path-following method of [18], the Lagrangian dual method of [36], or alternative techniques.

Remark 2 Regarding the solution at item (T) of Theorem 1, the constraints (9) are typically solved in one of the following two ways: either a desired decay rate $\bar{\alpha}$ is fixed and the BMIs are solved with $\alpha = \bar{\alpha}$ with the goal of maximizing β, so that the associated guaranteed region is maximized, or a desired guaranteed region size $\bar{\beta}$ is fixed and the BMIs are solved with $\beta = \bar{\beta}$ with the goal of maximizing α, so that the associated decay rate is maximized. In this last case, an appealing feature is that as long as the plant is not exponentially unstable (thus also including the polynomially unstable case), the BMI constraints are semiglobal, namely they are feasible for any arbitrarily large $\bar{\beta}$ thereby allowing one to design anti-windup compensation inducing an arbitrarily large guaranteed region. This fact is formalized in the next statement (whose proof is in Section 6.1). Note that this is as good as one can get because exponentially unstable plants are known to have bounded controllability regions and linear stabilizers are known to be insufficient to globally asymptotically stabilize certain polynomially unstable plants with bounded inputs.

Proposition 1 *If the matrix A only has eigenvalues in the closed left half plane, then given any fixed $\beta = \bar{\beta} > 0$, the BMIs (9) in the variables $P = P^T > 0$, K, $\alpha > 0$, $U_M > 0$ diagonal are feasible.* ◦

4 Extended anti-windup architecture

We propose here an alternative architecture to solve Problem 1 which uses, within the MRAW framework, a recently proposed alternative method to represent rate and magnitude saturation in anti-windup schemes [12]. The core idea behind this approach is to assume that it is possible [3] to compute the derivative of the controller output y_c in (2) and impose the rate saturation directly on this signal, so that the arising dynamics is not discontinuous and the magnitude and rate saturation limits are still satisfied. To this aim, we define an extended anti-windup compensator (extended because as compared to the previous solution in (7), this compensator has a larger number of states) having the form:

$$\dot{x}_{aw} = Ax_{aw} + B_u(u - y_c) \tag{10a}$$
$$\dot{\delta} = \mathrm{sat}_R(y_{c,dot} + v_1) \tag{10b}$$
$$y_{aw} = C_y x_{aw} + D_{yu}(u - y_c) \tag{10c}$$
$$z_{aw} = C_z x_{aw} + D_{zu}(u - y_c), \tag{10d}$$

where v_1 is a stabilizing signal to be designed and $y_{c,dot}$ is a signal reproducing as accurately as possible the derivative of the controller output y_c. The extended anti-windup compensator (10) should be interconnected to the saturated plant-controller pair (1), (2), (5) via the following anti-windup interconnection:

$$u_c = y - y_{aw}, \quad \nu = \mathrm{sat}_M(\delta). \tag{11}$$

A block diagram of the overall anti-windup scheme is represented in Figure 2. Note that, differently from typical anti-windup approaches, we don't compute the input/output mismatch provided by the saturation function to drive the anti-windup dynamics, but we rely on the peculiar dynamics in (10) to drive the input ν to the saturated plant (5), (1).

[3] This assumption is always satisfied if the controller is strictly proper. Nevertheless, if the controller is not strictly proper then approximate implementations are possible (see the following Remark 4).

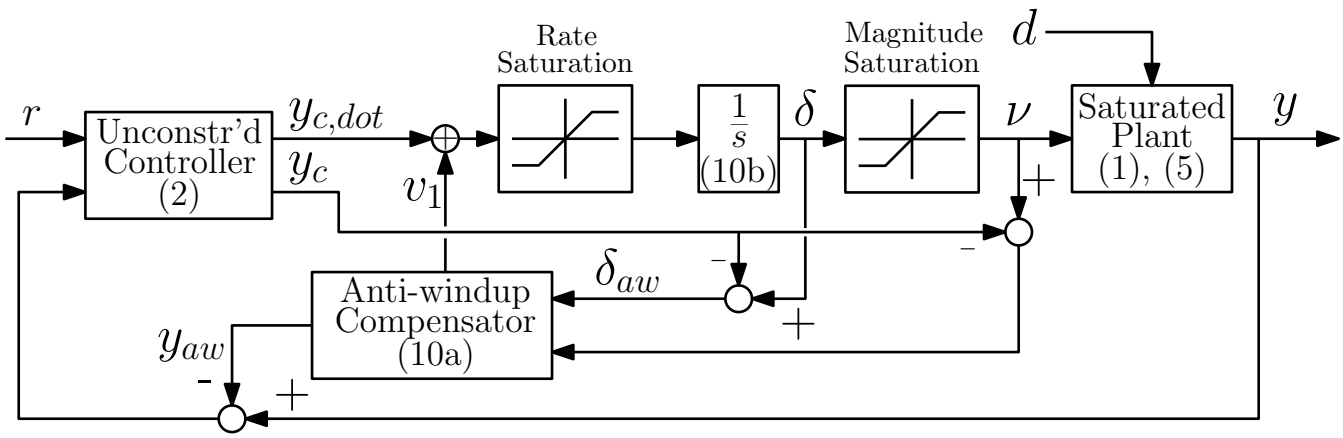

Fig. 2. Extended anti-windup architecture.

The next theorem, whose proof is reported in Section 6.2, establishes three solutions to Problem 1, hinging upon suitable designs of the stabilizing signal v_1 in (10).

Theorem 2 *Consider the anti-windup closed-loop (1), (2), (5), (10), (11). Under Assumptions 1 and 2, the controller state and output responses $(\bar{x}_c, \bar{y}_c)$ coincide with the unconstrained controller state and output responses $(\hat{x}_c, \hat{u})$. Moreover, the following holds:*

(G) If A is Hurwitz, then for any diagonal $K_\delta > 0$, the selection $v_1 = -K_\delta(\delta - y_c)$ solves the global anti-windup problem (G) in Problem 1.

(L) Selecting $v_1 = -K_{aw}\left[\begin{smallmatrix} x_{aw} \\ \delta - y_c \end{smallmatrix}\right]$, where K_{aw} is any stabilizing linear state feedback for

$$\dot{x}_{aw} = Ax_{aw} + B_u\delta_{aw} \tag{12a}$$

$$\dot{\delta}_{aw} = -K_{aw}\left[\begin{smallmatrix} x_{aw} \\ \delta_{aw} \end{smallmatrix}\right] \tag{12b}$$

solves the local anti-windup problem (L) in Problem 1.

(T) Consider any feasible solution to the following generalized eigenvalue problem in the variables $Q = Q^T > 0$, X, $\alpha > 0$, $\beta > 0$, $W_M > 0$ diagonal: [4]

$$\beta I < Q \tag{13a}$$

$$0 > \mathrm{He}\left[\begin{array}{c|c} \begin{bmatrix} A + \alpha I_n & B_u \end{bmatrix} Q & -B_u W_M \\ \hline \begin{bmatrix} 0 & \alpha I_m \\ 0 & I_m \end{bmatrix} Q + \begin{bmatrix} 0 & I_m \\ -I_m & 0 \end{bmatrix} X & \begin{matrix} 0 \\ -W_M \end{matrix} \end{array}\right] \tag{13b}$$

$$0 \leq \begin{bmatrix} \varepsilon^2 S_i Q & [X]_i^T \\ [X]_i & 1 \end{bmatrix}, i = 1, \ldots, 2m, \tag{13c}$$

where $S_i = M_i$ and $S_{m+i} = R_i$ for all $i = 1, \ldots, m$. Then, the following LMIs in the variables K_x, K_δ, k_{max}, $W_R > 0$ diagonal are feasible:

$$0 > \mathrm{He}\left[\begin{array}{c|cc} \begin{bmatrix} A + \alpha I_n & B_u \\ K_x & K_\delta + \alpha I_m \end{bmatrix} Q & \begin{matrix} -B_u W_M & 0 \\ 0 & -W_R \end{matrix} \\ \hline \begin{bmatrix} 0 & I_m \\ K_x & K_\delta \end{bmatrix} Q + \begin{bmatrix} 0 & I_m \\ -I_m & 0 \end{bmatrix} X & \begin{matrix} -W_M & 0 \\ 0 & -W_R \end{matrix} \end{array}\right] \tag{14a}$$

[4] Note that, while the overall sizes are consistent, the diagonal blocks in the partition of (13b) are not square; their sizes are $n \times n + m$, $n \times m$, $2m \times n + m$ and $2m \times m$, respectively, from left to right, top to bottom.

$$0 \leq \begin{bmatrix} k_{max} I & [K_x \; K_\delta] \\ \star & k_{max} I \end{bmatrix}. \tag{14b}$$

Moreover, selecting $v_1 = [K_x \; K_\delta] \left[\begin{smallmatrix} x_{aw} \\ \delta - y_c \end{smallmatrix}\right]$, *where* K_x *and* K_δ *arise from any solution to (14), solves the local (L) and the trade-off (T) anti-windup problems in Problem 1 with exponential bound* α *in the guaranteed region* $\mathcal{B}(\beta)$.

The solution at *item (G)* parallels the solution at item (G) of Theorem 1 as some generalization of the IMC anti-windup scheme (see [24]). Indeed, in this solution only the δ_{aw} subsystem in the transformed dynamics (12) is stabilized by the feedback function and the rest of the state (namely, x_{aw}) will converge to zero following the decay rate of A. Due to its IMC nature, this solution only applies to exponentially stable plants and behaves in unacceptable ways when the plant dynamics is lightly damped. The solution at *item (L)* parallels that at item (L) of Theorem 1 and has the same advantages/disadvantages discussed after the proof of Theorem 1, strengthened by the property that the controller states are well behaved. This solution was adopted in [42]. Similarly, the solution at *item (T)* parallels the solution at item (T) of Theorem 1 even though the trade off between β and α is carried out here by way of (quasi) convex constraints, so that global optima can always be determined. This is a strong advantage of this second approach versus the one of Section 3.

Remark 3 Regarding the solution at item (T) of Theorem 2, the constraints (13) are typically solved in one of the following two ways: either a desired decay rate $\bar{\alpha}$ is fixed and the LMIs arising from fixing $\alpha = \bar{\alpha}$ are solved with the goal of maximizing β, so that the associated guaranteed region is maximized, or a desired guaranteed region size $\bar{\beta}$ is fixed and the constraints arising from fixing $\beta = \bar{\beta}$ are solved maximizing α via a generalized eigenvalue problem, so that the associated decay rate is maximized. It may be also desirable to maximize the decay rate α while guaranteeing global properties (namely, $\beta \to \infty$). This can be done by transforming the regional constraints of item (T) into global ones, so that anti-windup with global exponential performance guarantees can be determined. This strategy is illustrated next and only applies to exponentially stable plants, which is reasonable to expect since global exponential convergence is not achievable via a bounded input on a non exponentially stable linear plant.

Proposition 2 *If* A *is Hurwitz, consider any solution to the generalized eigenvalue problem (13b) with* $X = 0$, *in the variables* $Q = Q^T > 0$, $\alpha > 0$, $W_M > 0$ *diagonal. Then, with that solution, the LMIs (14) with* $X = 0$ *in the variables* K_x, K_δ, k_{max}, $W_R > 0$ *diagonal are feasible. Moreover, selecting* $v_1 = [K_x \; K_\delta] \left[\begin{smallmatrix} x_{aw} \\ \delta - y_c \end{smallmatrix}\right]$, *where* K_x *and* K_δ *arise from any solution to (14), solves the global (G) and the trade-off (T) anti-windup problems in Problem 1 with exponential bound* α *and guaranteed region corresponding to the whole space.* ◦

As compared to the (T) solution of Theorem 1, the advantage of the (T) solution of Theorem 2 is that the constraints are convex (or quasi-convex because of the gevp) and can be efficiently solved by determining the globally optimal solution using commercial solvers such as the Matlab LMI Toolbox [11] (there wasn't such a guarantee with the BMIs of Theorem 1). Another advantage of this approach is that when the plant is exponentially stable the results in Proposition 2 provide a global solution to the problem of maximizing the exponential convergence rate. On the other hand, a drawback of the approach proposed here is that semiglobal results cannot be established for plants having poles in the closed left half plane. In other words no parallel statement to that in Proposition 1 can be proven. [5] .

Remark 4 One of the main difficulties in implementing the anti-windup architecture proposed in this section (Figure 2) is that the signal $y_{c,dot}$, *i.e.* the derivative of the controller output y_c, must be generated to be used in (10). If a strictly proper controller is used, such derivative can be explicitly and easily computed; otherwise, a viable alternative route, provided that $D_{yu} = 0$ in (1b), consists in filtering y_c by $F(s) = \frac{1}{1+\tau_d s}[1 \quad s]^T$ in order to produce $[\tilde{y}_c \quad \dot{\tilde{y}}_c]^T$ and replacing y_c by $\tilde{y}_c$ in the anti-windup scheme above (with the advantage that $\dot{\tilde{y}}_c$ is explicitly available). If this approach is taken, the proposed anti-windup scheme will recover the response of the modified unconstrained closed loop (with y_c replaced by $\tilde{y}_c$) instead of the response of the original unconstrained closed loop; but this also guarantees that the original response is essentially recovered, since it is possible to show that the modified and the original unconstrained closed loop responses can be made arbitrarily close if a sufficiently small τ_d is chosen. Note that the condition $D_{yu} = 0$ in (1b) requested above can be enforced by a preliminary loop transformation where (1b) is replaced by $y = C_y x + D_{yd} d$ and the first interconnection equation in (8) and (11) is replaced by

[5] The main reason for this limitation stands in the nature of the dynamics (27), which shows internal saturations unlike the parallel dynamics (18) which only have input saturations.

$u_c = y + D_{yu} y_c - y_{aw}$ (see [10, Fig. 2] for details). This strategy is adopted in our example in Section 5, where the controller is not strictly proper. ◦

Remark 5 To improve the transient performance induced by the anti-windup closed-loop, it is possible to modify the extended anti-windup architecture by using saturated versions of y_c and $y_{c,dot}$, namely replacing (10b) by

$$\dot{\delta} = \mathrm{sat}_R(\mathrm{sat}_{R(1-\varepsilon)}(y_{c,dot}) + v_1) \tag{15}$$

and by choosing signal v_1 as a feedback signal from $\begin{bmatrix} x_{aw} \\ \delta - \mathrm{sat}_{M(1-\varepsilon)}(y_c) \end{bmatrix}$, rather than $\begin{bmatrix} x_{aw} \\ \delta - y_c \end{bmatrix}$. Then it can be proved (details are omitted for brevity) that all the stated closed-loop properties are preserved and the transient performance of the anti-windup law is improved because the peaks in y_c and $y_{c,dot}$ are trimmed out. ◦

5 Simulation Example

Consider the short-period longitudinal dynamics of the VISTA/MATV F-16 at Mach 0.2 and altitude 10000 feet (corresponding to a dynamic pressure value of $40.8\,psf$) at a trim angle of attack of 28 degrees, described locally by a second order plant as in (1) with two states corresponding to the angle of attack and the pitch rate, respectively, and two inputs corresponding to the deviations of the elevator deflection and of the pitch thrust vectoring from the trim condition (see [34] for details). As in [34], the controller (2) is nonlinear and corresponds to a daisy chained allocation of the inputs, driven by a reference signal for the angle of attack.

We design two anti-windup compensators for this example. The first one corresponds to the construction at item (T) of Theorem 1, where, following Remark 2, we select $\bar{\beta} = 0.001$ and obtain an optimized guaranteed regional performance of $\alpha = 3.7849$ by solving the BMIs with the software YALMIP [27] and the commercial package PENBMI [23]. The corresponding simulations are represented by bold curves in Figure 3, where they are compared to the unconstrained response (solid), to the saturated response (dotted) and to the response using the construction in [34] (dashed), which can be seen as using the approach at item (L) of Theorem 1 (see [34] for details). Note that the (T) design of Theorem 1 induces a faster convergence than the one induced by the local solution of [34], in addition to providing stronger performance guarantees.

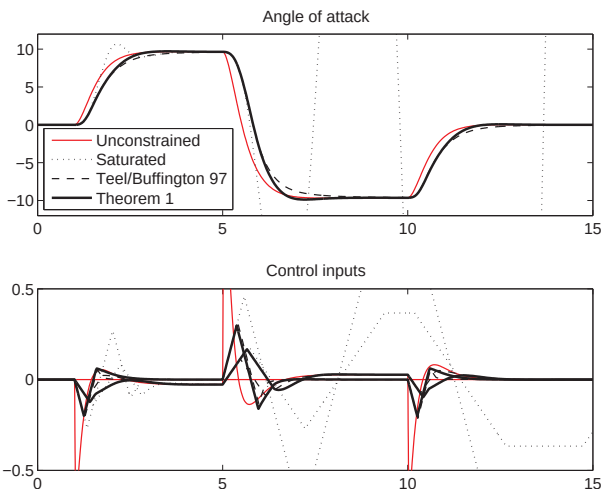

Fig. 3. Different responses using Theorem 1.

The second construction is the one at item (T) of Theorem 2, where, following Remark 3 we select $\bar{\beta} = 0.001$ so that the same guaranteed region is obtained. The arising guaranteed regional performance is $\alpha = 2.4537$ obtained by solving the LMIs with the software YALMIP [27] and the commercial package Matlab LMI Toolbox [11]. Note that this performance is worse than the one obtained with the previous approach. To construct the signal $y_{c,dot}$, we rely on Remark 4 by selecting $\tau_d = 0.1$ because the controller is not strictly proper. Moreover, to improve the transient performance we insert the extra saturation suggested in Remark 5. The corresponding simulations are represented by bold curves in Figure 4, where they are compared to the unconstrained response (solid), to the saturated response (dotted) and to the response using the construction in [34] (dashed). Once again, the (T) design of Theorem 2 leads

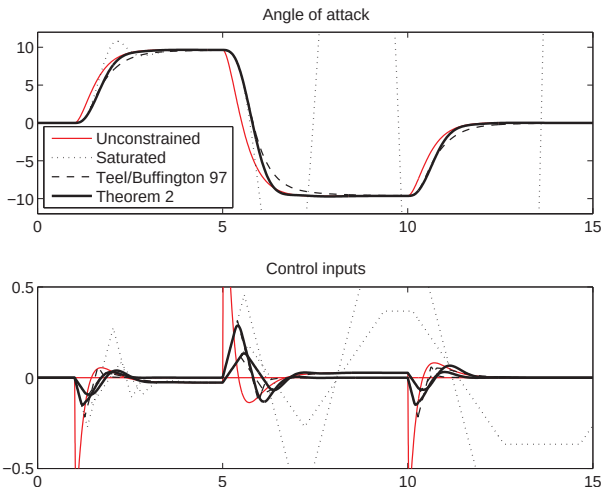

Fig. 4. Different responses using Theorem 2.

to a faster convergence than the local design in [34]. Note also that, in spite of the worse guaranteed performance level, the unconstrained response recovery is slightly more desirable than that obtained from Theorem 1. This is probably due to the conservativeness of the performance bounds.

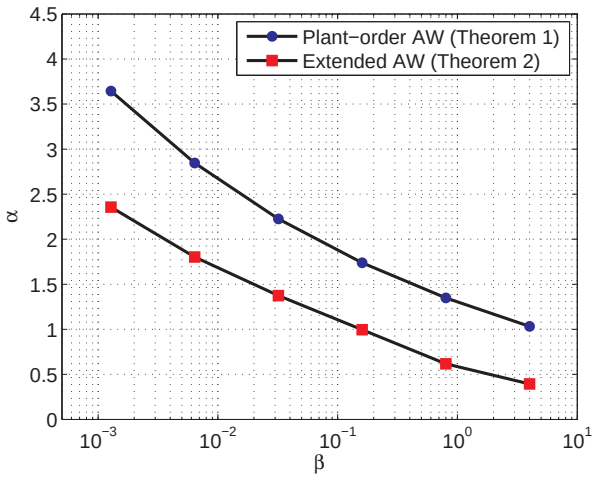

Fig. 5. Trade-off between achievable stability region size (β) and guaranteed exponential convergence rate (α) using the (T) solutions of Theorems 1 and 2.

Finally, in Figure 5 we show the two curves arising from the trade off between β and α for our two constructions with guaranteed exponential decay rate. In the figure, the region on the bottom left of the curve is the feasibility region and the region on the top right is the infeasibility region. Note that, quite interestingly, for this example the first construction appears to achieve a better performance than the second one. This fact is compensated by the converse properties in terms of computational burden, indeed the BMIs associated with the first approach are solved suboptimally by the PENBMI solver [23] which requires significant computational effort and is more prone to numerical problems. The LMIs associated with the second approach, instead, are efficiently solved using MATLAB's LMI toolbox [11] and are guaranteed to provide the globally optimal solution.

6 Proofs

The following lemma, which is a reformulation of [8, Lemma 1] (see also [19]), will be useful. In particular, we will use it later with $w = Hx$, where matrix H is a free parameter, and then we will establish exponential stability of a sublevel set of a Lyapunov function contained in the stripe of the state space where $\mathrm{dz}(Hx) = 0$.

Lemma 1 *Given any (magnitude) saturation function* $\mathrm{sat}(\cdot) : \mathbb{R}^m \to \mathbb{R}^m$*, define the deadzone function as* $\mathrm{dz}(s) := s - \mathrm{sat}(s)$*. Then, for any* $v \in \mathbb{R}^m$ *and any* $w \in \mathbb{R}^m$ *satisfying* $\mathrm{dz}(w) = 0$*, the following bound holds:*

$$\mathrm{dz}(v)^T U(\mathrm{dz}(v) - v + w) \leq 0, \tag{16}$$

where U *is any positive definite diagonal matrix.*

Proof sketch. Eq. (16) comes from $(w - \mathrm{sat}(v))(v - \mathrm{sat}(v)) \leq 0$, which holds as long as $\mathrm{dz}(w) = 0$. •

6.1 Proofs of Theorem 1 and Proposition 1

In the following Lemma we show a useful characteristic of the nonlinearity $\mathrm{sat}_{MR}(\cdot)$ described by (5)

Lemma 2 *Given any pair of functions* $w_1(\cdot) : \mathbb{R} \to \mathbb{R}^m$*,* $w_2(\cdot) : \mathbb{R} \to \mathbb{R}^m$ *and any* $\epsilon \in (0, 1)$*, the following holds:*

$$\mathrm{sat}_{MR}(\mathrm{sat}_{MR\epsilon}(w_1) + \mathrm{sat}_{MR(1-\epsilon)}(w_2)) = \mathrm{sat}_{MR\epsilon}(w_1) + \mathrm{sat}_{MR(1-\epsilon)}(w_2). \tag{17}$$

Moreover, (5) *is* $\mathcal{L}_2$ *stable with finite gain not greater than* $\sqrt{2}$*, namely* $s \in \mathcal{L}_2$ *implies that* $\|\mathrm{sat}_{MR}(s)\|_2 \leq \sqrt{2}\|s\|_2$*.*

Proof. Since decentralized saturations are considered, it is enough to prove the case $m = 1$.
As for (17), since $\mathrm{sat}_{MR\epsilon}(w_1)$ has magnitude and rate not exceeding $M\epsilon$ and $R\epsilon$, respectively, and similarly $\mathrm{sat}_{MR(1-\epsilon)}(w_2)$ has magnitude and rate not exceeding $M(1-\epsilon)$ and $R(1-\epsilon)$, respectively, then, denoting by $s(t)$ their sum, we have that $|s(t)| \leq M$ and $|\dot{s}(t)| \leq R$, $\forall t \in \mathbb{R}$. Moreover, as established in [41, Lemma B.1, p. 145], (5) has unique solutions for all initial conditions and all input functions. [6] Therefore $\mathrm{sat}_{MR}(s(t)) = s(t)$, $\forall t \in \mathbb{R}$, which implies (17).
As for the bound $\|\mathrm{sat}_{MR}(s)\|_2 \leq \sqrt{2}\|s\|_2$ for $s \in \mathcal{L}_2$, let $\dot{\mu}(t) = R\,\mathrm{sign}(\mathrm{sat}_M(s(t)) - \mu(t))$ and consider the storage function $V(\mu) = \frac{|\mu|^3}{3}$. It will now be shown that $\dot{V}(\mu) < -R\mu^2 + 2Rs^2$, from which the claim follows by integration. Taking the time derivative yields $\dot{V}(\mu) = -R|\mu|^2\mathrm{sign}(\mu)\mathrm{sign}(\mu - \mathrm{sat}_M(s))$. If $|\mu| > |\mathrm{sat}_M(s)|$, then $\mathrm{sign}(\mu - \mathrm{sat}_M(s)) = \mathrm{sign}(\mu)$ and then $\dot{V}(\mu) = -R|\mu|^2 \leq -R|\mu|^2 + 2R|s|^2$. On the other hand, if $|\mu| \leq |\mathrm{sat}_M(s)|$, then $\dot{V}(\mu) \leq R|\mu|^2 \leq -R|\mu|^2 + 2R|\mu|^2 \leq -R|\mu|^2 + 2R|\mathrm{sat}_M(s)|^2 \leq -R|\mu|^2 + 2R|s|^2$. •

The advantage in the interconnection between (1), (2) and (7) via the equation (8) is illustrated by the following statement.

Lemma 3 *For the closed-loop (1), (2), (5), (7), (8) the following holds.*

(i) If $x_{aw}(0) = 0$ *and* $u(0) = y_c(0)$*, then* [7] *the controller state* $\bar{x}_c$ *and output response* $\bar{y}_c$ *coincides with the virtual response* $\hat{x}_c$ *and* $\hat{y}_c$ *produced by the unconstrained closed-loop (1), (2), (3) from the same initial conditions and under the action of the same external inputs* r *and* d*. Moreover,* $\bar{z}_{aw} = \bar{z} - \hat{z}$*.*

(ii) If there exists a static feedback control law $k(\cdot)$ *from* x_{aw} *such that* $|k(x_{aw})| \leq c|x_{aw}|$ *for some* $c > 0$ *and the following system*

$$\dot{x}_{aw} = Ax_{aw} + B_u\mathrm{sat}_{MR\varepsilon}(k(x_{aw})) + B_u\sigma \tag{18}$$

is locally (respectively, globally) $\mathcal{L}_2$ *stable from* σ *to* x_{aw}*, then the anti-windup closed-loop (1), (2), (7), (8) with*

$$v_1 = \mathrm{sat}_{MR\varepsilon}(k(x_{aw})) \tag{19}$$

is such that there exists a local (respectively, global) nonlinear $\mathcal{L}_2$ *gain from* $\begin{bmatrix} \mathrm{dz}_{M(1-\varepsilon)}(\hat{u}) \\ \mathrm{dz}_{R(1-\varepsilon)}(\dot{\hat{u}}) \end{bmatrix}$ *to* $\bar{z} - \hat{z}$*; namely as long as the unconstrained trajectory does not spend infinite energy outside the (restricted) saturation limits, then the actual output response* $\bar{z}$ *converges in the* $\mathcal{L}_2$ *sense to the ideal unconstrained output response* $\hat{z}$

[6] This property is nontrivial due to the discontinuous dynamics in (5).

[7] Similar to the results in [12,35], if $x_{aw}(0) \neq 0$ and/or $u(0) \neq y_c(0)$, then one experiences an extra transient at startup, but the closed-loop properties remain unchanged.

Proof. Item (i). The proof of this item is carried out along the usual lines with the model recovery schemes (see also [1,35,43] for similar reasonings) so it is only sketched here. Writing the anti-windup closed-loop dynamics (1), (2), (7), (8) in the following coordinates: $(x_a, x_c, x_{aw}) = (x - x_{aw}, x_c, x_{aw})$, the arising representation is in cascade form, where the first subsystem comprising the states (x_a, x_c) coincides with the unconstrained closed-loop dynamics (1), (2) and (3) and the second subsystem is the anti-windup compensator (7), which is driven by the signal y_c produced by the first subsystem. Due to this fact, the controller response coincides with the unconstrained controller response, which establishes $(\bar{x}_c, \bar{y}_c) = (\hat{x}_c, \hat{u})$ for all times. Moreover, $\hat{z} = z_a = \bar{z} - \bar{z}_{aw}$.

Item (ii). With the selection for u in (8) and with v_1 as in (19), by equation (17) of Lemma 2 it is easily seen that:

$$\begin{aligned} u - y_c &= \mathrm{sat}_{MR}(\mathrm{sat}_{MR(1-\varepsilon)}(y_c) + \mathrm{sat}_{MR\varepsilon}(v_1)) - y_c \\ &= \mathrm{sat}_{MR(1-\varepsilon)}(y_c) + \mathrm{sat}_{MR\varepsilon}(v_1) - y_c \\ &= \mathrm{dz}_{MR(1-\varepsilon)}(y_c) + \mathrm{sat}_{MR\varepsilon}(v_1), \end{aligned}$$

and then (7a) becomes (18) with $\sigma = \mathrm{dz}_{MR(1-\varepsilon)}(\bar{y}_c)$ which is an $\mathcal{L}_2$ signal if $\begin{bmatrix} \mathrm{dz}_{M(1-\varepsilon)}(\hat{u}) \\ \mathrm{dz}_{R(1-\varepsilon)}(\dot{\hat{u}}) \end{bmatrix} \in \mathcal{L}_2$.

Since $\bar{y}_c = \hat{u}$ and by item (i) of this lemma, $\bar{z} - \hat{z} = \bar{z}_{aw}$, then the result follows from the $\mathcal{L}_2$ stability assumption on (18), the fact that $\|z_{aw}\|_2 \leq |C_z|\|x_{aw}\|_2 + |D_{zu}|\|dz_{MR(1-\varepsilon)}(y_c) + \mathrm{sat}_{MR\varepsilon}(k(x_{aw}))\|_2$ the $\mathcal{L}_2$ stability of (5) established in Lemma 2 and the fact that $\|k(x_{aw})\|_2 \leq c\|x_{aw}\|_2$ since $|k(x_{aw})| \leq c|x_{aw}|$. •

Based on the preliminary statements in Lemma 3, it is possible to prove Theorem 1 as follows.

Proof of Theorem 1.
Item (G). By Lemma 3, it is sufficient to prove that system (18) is globally $\mathcal{L}_2$ stable from σ to z_{aw}. Since $v_1 = 0$ and A is Hurwitz, then (18) corresponds to a linear exponentially stable system under the action of an $\mathcal{L}_2$ disturbance. Therefore the system has a global finite input/output $\mathcal{L}_2$ gain (see, e.g., [22, Cor. 5.1]) and the result follows.

Item (L). Similar to the previous item, by relying on Lemma 3, we address the local $\mathcal{L}_2$ stability of system (18). Since for small enough states x_{aw}, the stabilizing signal v_1 remains below the saturation limits, then the origin of (18) is locally exponentially stable. This implies local $\mathcal{L}_2$ stability from σ to z_{aw} (see, e.g., [22, Cor. 5.1]).

Item (T). Consider the Lyapunov function $V = x_{aw}^T P x_{aw}$ for system (18). Applying a Schur complement (see, [7]) to (9c) and to (9d), we get, respectively,

$$\begin{aligned} ([K(A + B_u K)]_i)^T([K(A + B_u K)]_i) &\leq \varepsilon^2 R_i^2 P, \\ [H]_i^T [H]_i &\leq \varepsilon^2 M_i^2 P, \end{aligned} \tag{20}$$

for $i = 1, \ldots m$, which imply that in the set $\mathcal{E}(P, 1) := \{x_{aw} : V(x_{aw}) \leq 1\}$ the following bounds hold, respectively:

$$|(\varepsilon R)^{-1} K(A + B_u K) x_{aw}|_\infty \leq 1, \tag{21a}$$

$$|(\varepsilon M)^{-1} H x_{aw}|_\infty \leq 1. \tag{21b}$$

Using $v_1 = K x_{aw}$, then for all $x_{aw} \in \mathcal{E}(P, 1)$, the first condition in (21) implies that $\mathrm{sat}_{R\varepsilon}(\dot{v}_1) = \dot{v}_1$, so that $\mathrm{sat}_{MR\varepsilon}(v_1) = \mathrm{sat}_{M\varepsilon}(v_1)$. Moreover, the second condition in (21) implies that $\mathrm{sat}_{M\varepsilon}(H x_{aw}) = H x_{aw}$ and, by the generalized sector condition in Lemma 1, we get for any positive definite diagonal matrix U_M:

$$\mathrm{dz}_{MR\varepsilon}(K x_{aw})^T U_M (\mathrm{dz}_{MR\varepsilon}(K x_{aw}) - (K - H) x_{aw}) \leq 0, \tag{22}$$

for all $x_{aw} \in \mathcal{E}(P, 1)$.

Consider now the time derivative of V along the dynamics (18) with $\sigma = 0$. Using (22) and defining $q = \mathrm{dz}_{MR\varepsilon}(K x_{aw})$, we get for all $x_{aw} \in \mathcal{E}(P, 1)$,

$$\begin{aligned} \dot{V} &\leq \dot{V} - 2q^T U_M (q - (K - H) x_{aw}) \\ &= x_{aw}^T \left(\mathrm{He}(P(A + B_u K) x_{aw} - 2P B_u q\right) \end{aligned}$$

$$
\begin{aligned}
&- 2q^T U_M(q - (K-H)x_{aw}) \\
&= \begin{bmatrix} x_{aw} \\ q \end{bmatrix}^T \mathrm{He} \begin{bmatrix} P(A+B_uK) & -PB_u \\ U_M(K-H) & -U_M \end{bmatrix} \begin{bmatrix} x_{aw} \\ q \end{bmatrix} \\
&< -2\alpha x_{aw}^T P x_{aw} = -2\alpha V,
\end{aligned}
$$

where we have used (9b) in the last step. Since by (9a), $\mathcal{E}(P,1) \supseteq \mathcal{B}(\beta)$, then the bound above on $\dot{V}$ implies that the origin of (18) is locally exponentially stable with region of attraction including $\mathcal{B}(\beta)$. Similar to the proof of item (L), local $\mathcal{L}_2$ stability of system (18) is guaranteed. Moreover, exponential recovery trivially follows from the relation $\dot{V} \leq -2\alpha V$, which holds on the invariant set $\mathcal{E}(P,1)$ and implies that for $x_{aw}(0)$ in this set $V(x_{aw}(t)) \leq e^{-2\alpha t}V(x_{aw}(0))$; denoting by λ_m and λ_M the minimum and maximum eigenvalues of the symmetric matrix $P > 0$, and taking into account that $\lambda_m |x_{aw}|_2^2 \leq V(x_{aw}) \leq \lambda_M |x_{aw}|_2^2$ since $V(x_{aw}) = x_{aw}^T P x_{aw}$, the exponential decay of V implies that $|x_{aw}(t)|_2 \leq \sqrt{\frac{\lambda_M}{\lambda_m}} e^{-\alpha t} |x_{aw}(0)|_2$. •

Proof of Proposition 1. Under Assumption 1, by [25, Lemma 2.7], for all $\varepsilon_1 > 0$, there exists a unique matrix $P(\varepsilon_1) > 0$ that solves the equation

$$
A^T P(\varepsilon_1) + P(\varepsilon_1)A - P(\varepsilon_1)B_u B_u^T P(\varepsilon_1) + \varepsilon_1 I = 0 \tag{23}
$$

Moreover, $P(\varepsilon_1) \to 0$ as $\varepsilon_1 \to 0$ and, by choosing $K(\varepsilon_1) = -B_u^T P(\varepsilon_1)$, we have that $A + B_u K(\varepsilon_1)$ is asymptotically stable for all $\varepsilon_1 > 0$.
Consider (9a). For any given β, we can find ε_1 small enough that guarantees $P(\varepsilon_1) < \frac{1}{\beta}$.
Consider (9b). Take $H(\varepsilon_1) = K(\varepsilon_1)$ and note that $2x^T P(\varepsilon_1)B_u q \leq 2\varepsilon_2^2 x^T x + 2q^T \frac{B_u^T P(\varepsilon_1)P(\varepsilon_1)B_u}{\varepsilon_2^2} q$. Then, consider (9b) multiplied on the right and on the left by $[\,x\ q]^T$, it follows that the right-hand side of (9b) is less then or equal to

$$
2x^T Q_1(\varepsilon_1, \varepsilon_2, \alpha)x + 2q^T Q_2(\varepsilon_1, \varepsilon_2)q \tag{24}
$$

where $Q_1(\varepsilon_1, \varepsilon_2, \alpha) = P(\varepsilon_1)A + P(\varepsilon_1)B_u K(\varepsilon_1) + \alpha I + \varepsilon_2^2 I$ and $Q_2(\varepsilon_1, \varepsilon_2) = \frac{B_u^T P(\varepsilon_1)P(\varepsilon_1)B_u}{\varepsilon_2^2} - U_M$ By choosing α and ε_2 so that $\alpha + \varepsilon_2^2 < \varepsilon_1$, (23) guarantees that $Q_1(\varepsilon_1, \varepsilon_2, \alpha) < 0$. Moreover, by choosing $U_M > \frac{B_u^T P(\varepsilon_1)P(\varepsilon_1)B_u}{\varepsilon_2^2}$ we have that $Q_2(\varepsilon_1, \varepsilon_2) < 0$.
Finally, for each i, by applying the Schur complement to (9c), we have that $([K(\varepsilon_1)(A + B_u K(\varepsilon_1))]_i)^T([K(\varepsilon_1)(A + B_u K(\varepsilon_1))]_i) \leq \varepsilon^2 R_i^2 P(\varepsilon_1)$ for a small enough ε_1. To see this, note that $K(\varepsilon_1) = -B_u^T P(\varepsilon_1)$ guarantees that the left-hand side shrinks to zero faster than $\varepsilon_1^2 \to 0$, while $P(\varepsilon_1)$ goes to zero as $\varepsilon_1 \to 0$. A similar argument can be used with (9d). •

6.2 Proofs of Theorem 2 and Proposition 2

The following Lemma will be used to prove Lemma 5.

Lemma 4 *Given any pair $v, y \in \mathbb{R}$ and any $\varepsilon \in (0,1)$, there exists $\epsilon \in [\varepsilon, 2-\varepsilon]$ such that the following holds:*

$$
\mathrm{sat}_S(y+v) - y = \mathrm{sat}_{S\epsilon}(v) + \sigma, \tag{25}
$$

where $|\sigma| \leq |2\mathrm{dz}_{S(1-\varepsilon)}(y)|$

Proof. Let $\delta = 1 - \varepsilon$. We have that

$$
\mathrm{sat}_S(y+v) - y = \mathrm{sat}_S(\mathrm{sat}_{S\delta}(y) + v) - \mathrm{sat}_{S\delta}(y) + \omega_1 + \omega_2,
$$

with $\omega_1 = \mathrm{sat}_S(y+v) - \mathrm{sat}_S(\mathrm{sat}_{S\delta}(y) + v)$ and $\omega_2 = \mathrm{sat}_{S\delta}(y) - y$. Hence $|\omega_1 + \omega_2| \leq |\omega_1| + |\omega_2| \leq |\mathrm{dz}_{S\delta}(y)|$ since $|\omega_1| \leq |\mathrm{sat}_S(y+v) - \mathrm{sat}_S(\mathrm{sat}_{S\delta}(y) + v)| \leq |y + v - \mathrm{sat}_{S\delta}(y) - v| \leq |\mathrm{dz}_{S\delta}(y)|$ and $|\omega_2| = |\mathrm{sat}_{S\delta}(y) - y| \leq |\mathrm{dz}_{S\delta}(y)|$. Moreover, there exists $\epsilon \in [\varepsilon, 2-\varepsilon]$ such that

$$
\mathrm{sat}_S(\mathrm{sat}_{S\delta}(y) + v) - \mathrm{sat}_{S\delta}(y) = \mathrm{sat}_{S\epsilon}(v) \tag{26}
$$

In fact, if $|y| \geq \delta$ and $yv \geq 0$ then (26) is satisfied by $\epsilon = \varepsilon$ and if $|y| \geq \delta$ and $yv \leq 0$ then (26) is satisfied by $\epsilon = 2 - \varepsilon$. It follows that for $|y| < \delta$ the equation is satisfied by some $\epsilon \in (\varepsilon, 2 - \varepsilon)$. •

Similar to the case discussed in the previous section, the key properties of the anti-windup scheme rely on the fact that the signal y_{aw} keeps the controller well behaved, while the action of the stabilizer v_1 enforces the desired unconstrained response recovery. This is formalized in the following lemma.

Lemma 5 *For the closed-loop (1), (2), (5), (10), (11) the following holds.*

(i) If $x_{aw}(0) = 0$ and $u(0) = \delta(0) = y_c(0)$, then [8] the controller state and output response coincides with the virtual response produced by the unconstrained closed-loop (1), (2), (3) from the same initial conditions and under the action of the same external inputs r and d. Moreover, $\bar{z}_{aw} = \bar{z} - \hat{z}$.

(ii) If there exists a static feedback control law $k(\cdot)$ from $\left[\begin{smallmatrix} x_{aw} \\ \delta_{aw} \end{smallmatrix}\right]$ such that $\left|k(\left[\begin{smallmatrix} x_{aw} \\ \delta_{aw} \end{smallmatrix}\right])\right|_2 \leq c\left|\left[\begin{smallmatrix} x_{aw} \\ \delta_{aw} \end{smallmatrix}\right]\right|_2$ for some $c > 0$ and for any function $\epsilon(\cdot) : \mathbb{R} \to \mathbb{R}^m$ such that $\varepsilon \leq \epsilon_i(t)$ for all t, $i = 1, \ldots, m$, the following system

$$\dot{x}_{aw} = Ax_{aw} + B_u \mathrm{sat}_{M_{\epsilon(t)}}(\delta_{aw}) + B_u \sigma_M, \tag{27a}$$

$$\dot{\delta}_{aw} = \mathrm{sat}_{R\epsilon(t)}\left(k\left(\left[\begin{smallmatrix} x_{aw} \\ \delta_{aw} \end{smallmatrix}\right]\right)\right) + \sigma_R, \tag{27b}$$

(with $M_{\epsilon(t)} := \mathrm{diag}(M)\epsilon(t)$) is locally (respectively, globally) $\mathcal{L}_2$ stable from (σ_M, σ_R) to (x_{aw}, δ_{aw}), then the anti-windup closed-loop (1), (2), (10), (11) with $v_1 = k\left(\left[\begin{smallmatrix} x_{aw} \\ \delta - y_c \end{smallmatrix}\right]\right)$ is such that there exists a local (respectively, global) $\mathcal{L}_2$ gain from $\left[\begin{smallmatrix} \mathrm{dz}_{M(1-\varepsilon)}(\hat{u}) \\ \mathrm{dz}_{R(1-\varepsilon)}(\dot{\hat{u}}) \end{smallmatrix}\right]$ to $\bar{z} - \hat{z}$, namely as long as the unconstrained trajectory does not spend infinite energy outside the (restricted) saturation limits, then the actual output response z converges in the $\mathcal{L}_2$ sense to the ideal unconstrained output response $\hat{z}$.

Proof. First note that by [12, Lemma 1], since $\nu(t)$ in (11) is below the saturation limits, then $u(t) = \nu(t)$ for all t, that is, the closed-loop trajectories coincide with those of (1), (2), (10), (11) interconnected via

$$u_c = y - y_{aw}, \quad u = \mathrm{sat}_M(\delta). \tag{28}$$

Therefore we carry out the proof for this equivalent closed-loop system.

Item (i). The proof is a generalization of the proof of item (i) of Lemma 3. The closed-loop dynamics in the coordinates $(x_a, x_c, x_{aw}, \delta) = (x - x_{aw}, x_c, x_{aw}, \delta)$ corresponds to a cascade representation where the first subsystem (whose state is (x_a, x_c)) coincides with the unconstrained closed-loop dynamics (1), (2) and (3) and the second subsystem is the anti-windup compensator (10), which is driven by the two signals y_c and $y_{c,dot}$. Due to this fact, the controller response coincides with the unconstrained controller response, which establishes $(\bar{x}_c, \bar{y}_c) = (\hat{x}_c, \hat{u})$ for all times. Moreover, $\hat{z} = z_a = \bar{z} - \bar{z}_{aw}$.

Item (ii). Consider the dynamics (10) with the selection for u in (28), in the coordinates $(x_{aw}, \delta_{aw}) := (x_{aw}, \delta - y_c)$ and with $v_1 = k\left(\left[\begin{smallmatrix} x_{aw} \\ \delta - y_c \end{smallmatrix}\right]\right)$, namely in the new coordinates $v_1 = k\left(\left[\begin{smallmatrix} x_{aw} \\ \delta_{aw} \end{smallmatrix}\right]\right)$:

$$\dot{x}_{aw} = Ax_{aw} + B_u(\mathrm{sat}_M(\bar{y}_c + \delta_{aw}) - \bar{y}_c) \tag{29a}$$

$$\dot{\delta}_{aw} = \mathrm{sat}_R(\bar{y}_{c,dot} + v_1) - \bar{y}_{c,dot} \tag{29b}$$

$$z_{aw} = C_z x_{aw} + D_{zu}(\mathrm{sat}_M(y_c + \delta_{aw}) - y_c) \tag{29c}$$

By Lemma 4, (29) yields (27) with $|\sigma_M| \leq |2\mathrm{dz}_{M(1-\varepsilon)}(\bar{y}_c)|$, $|\sigma_R| \leq |2\mathrm{dz}_{R(1-\varepsilon)}(\bar{y}_{c,dot})|$. Since $\bar{y}_c = \hat{u}$ and $\bar{y}_{c,dot} = \dot{\bar{y}}_c = \dot{\hat{u}}$, and by item (i) of this lemma, $\bar{z} - \hat{z} = \bar{z}_{aw}$, then the result follows from the $\mathcal{L}_2$ stability assumption on (27), the fact that $\|z_{aw}\|_2 \leq |C_z| \cdot \|x_{aw}\|_2 + |D_{zu}| \cdot \|\mathrm{sat}_{R\varepsilon}(k\left(\left[\begin{smallmatrix} x_{aw} \\ \delta - y_c \end{smallmatrix}\right]\right))\|_2$, and $\|k\left(\left[\begin{smallmatrix} x_{aw} \\ \delta - y_c \end{smallmatrix}\right]\right)\|_2 \leq c\|x_{aw}\|_2$ since $|k\left(\left[\begin{smallmatrix} x_{aw} \\ \delta - y_c \end{smallmatrix}\right]\right)| \leq c|x_{aw}|$. •

Based on the preliminary statements in Lemmas 4 and 5, it is possible to prove Theorem 2 as follows.

[8] As in [35], if the anti-windup compensation and/or the dynamics (5) are initialized differently then one experiences an extra transient at startup, but the closed-loop properties remain unchanged.

Proof. Theorem 2.
Item (G). By Lemma 5, it is sufficient to prove that system (27) with $k\left(\left[\begin{smallmatrix} x_{aw} \\ \delta - y_c \end{smallmatrix}\right]\right) = -K_\delta \delta_{aw}$ is globally $\mathcal{L}_2$ stable from (σ_M, σ_R) to z_{aw}. With that selection, the second equation in (27) becomes $\dot{\delta}_{aw} = -\mathrm{sat}_R(K_\delta \delta_{aw}) + \sigma_R$, which is well known to have a global nonlinear gain from σ_R to δ_{aw} (a direct proof is obtained by a trivial modification of the proof of item (*iii*) of [12, Lemma 1]). Then the first equation in (27) is to an exponentially stable linear system driven by the two $\mathcal{L}_2$ signals $\mathrm{sat}_M(\delta_{aw})$ and σ_M. Then $x_{aw} \in \mathcal{L}_2$ and finally also $z_{aw} \in \mathcal{L}_2$.

Item (L). Similar to the previous item, using Lemma 5, we address the local $\mathcal{L}_2$ stability of system (27). Since for small enough states (x_{aw}, δ_{aw}), the stabilizing signal v_1 remains below the saturation limits, then the origin of (27) is locally exponentially stable. This implies local $\mathcal{L}_2$ stability from (σ_M, σ_R) to z_{aw} [22, Cor. 5.1].

Item (T). We first show that any solution to (13a), (13c), (14), guarantees item (T). Then we show that any solution to (13) guarantees feasibility of (14). In the proof we actually disregard constraint (14b) because it is always feasible for a large enough k_{max} (it will be used to determine numerically convenient controller gains).

Consider the Lyapunov function $V = \left[\begin{smallmatrix} x_{aw} \\ \delta_{aw} \end{smallmatrix}\right]^T P \left[\begin{smallmatrix} x_{aw} \\ \delta_{aw} \end{smallmatrix}\right]$ for system (27), where $P = Q^{-1}$. Pre- and post- multiplying (13c) by the matrix $\left[\begin{smallmatrix} P & 0 \\ 0 & 1 \end{smallmatrix}\right]$, we get

$$0 \leq \begin{bmatrix} \varepsilon^2 S_i P & [H]_i^T \\ [H]_i & 1 \end{bmatrix}, i = 1, \ldots, 2m, \tag{30}$$

where $H = XP$. Using a Schur complement [7] on (30), we get $[H]_i^T [H]_i \leq \varepsilon^2 S_i^2 P$, $i = 1, \ldots 2m$, and then in $\mathcal{E}(P, 1) := \left\{\left[\begin{smallmatrix} x_{aw} \\ \delta_{aw} \end{smallmatrix}\right] : V\left(\left[\begin{smallmatrix} x_{aw} \\ \delta_{aw} \end{smallmatrix}\right]\right) \leq 1\right\}$ it holds that $\left|\varepsilon S^{-1} H \left[\begin{smallmatrix} x_{aw} \\ \delta_{aw} \end{smallmatrix}\right]\right|_\infty \leq 1$. The last inequality implies that for all $\left[\begin{smallmatrix} x_{aw} \\ \delta_{aw} \end{smallmatrix}\right] \in \mathcal{E}(P, 1)$, $\mathrm{sat}_{S\varepsilon}\left(H \left[\begin{smallmatrix} x_{aw} \\ \delta_{aw} \end{smallmatrix}\right]\right) = H \left[\begin{smallmatrix} x_{aw} \\ \delta_{aw} \end{smallmatrix}\right]$ and, by the generalized sector condition in Lemma 1, for any positive definite diagonal matrix $U := \left[\begin{smallmatrix} U_M & 0 \\ 0 & U_R \end{smallmatrix}\right]$ and for all $\left[\begin{smallmatrix} x_{aw} \\ \delta_{aw} \end{smallmatrix}\right] \in \mathcal{E}(P, 1)$,

$$q^T U \left(q - \left(\begin{bmatrix} 0 & I_m \\ K_x & K_\delta \end{bmatrix} - H \right) \begin{bmatrix} x_{aw} \\ \delta_{aw} \end{bmatrix} \right) \leq 0, \tag{31}$$

where $q := \begin{bmatrix} \mathrm{dz}_M^T(\delta_{aw}) & \mathrm{dz}_R^T\left(K_x x_{aw} + K_\delta \delta_{aw}\right) \end{bmatrix}^T$.

Consider now the time derivative of V along the dynamics (27) with $\sigma_M = 0$ and $\sigma_R = 0$. Using (31), we get for all $\left[\begin{smallmatrix} x_{aw} \\ \delta_{aw} \end{smallmatrix}\right] \in \mathcal{E}(P, 1)$,

$$\begin{aligned}
\dot{V} &\leq \dot{V} - 2q^T U \left(q - \left(\begin{bmatrix} 0 & I_m \\ K_x & K_\delta \end{bmatrix} + H \right) \begin{bmatrix} x_{aw} \\ \delta_{aw} \end{bmatrix} \right) \\
&= \begin{bmatrix} x_{aw} \\ \delta_{aw} \end{bmatrix}^T \mathrm{He}\left(P \begin{bmatrix} A & B \\ K_x & K_\delta \end{bmatrix} \right) \begin{bmatrix} x_{aw} \\ \delta_{aw} \end{bmatrix} \\
&\quad + 2 \begin{bmatrix} x_{aw} \\ \delta_{aw} \end{bmatrix}^T P \begin{bmatrix} -B & 0 \\ 0 & -I_m \end{bmatrix} q \\
&\quad - 2q^T U \left(q - \left(\begin{bmatrix} 0 & I_m \\ K_x & K_\delta \end{bmatrix} - H \right) \begin{bmatrix} x_{aw} \\ \delta_{aw} \end{bmatrix} \right) \\
&= w^T \mathrm{He} \begin{bmatrix} P \begin{bmatrix} A & B \\ K_x & K_\delta \end{bmatrix} & P \begin{bmatrix} -B & 0 \\ 0 & -I_m \end{bmatrix} \\ U \left(\begin{bmatrix} 0 & I_m \\ K_x & K_\delta \end{bmatrix} - H \right) & -U \end{bmatrix} w \\
&< -2\alpha \begin{bmatrix} x_{aw} \\ \delta_{aw} \end{bmatrix}^T P \begin{bmatrix} x_{aw} \\ \delta_{aw} \end{bmatrix} = -2\alpha V\left(\begin{bmatrix} x_{aw} \\ \delta_{aw} \end{bmatrix} \right),
\end{aligned}$$

where $w := [x_{aw}^T \;\; \delta_{aw}^T \;\; q^T]^T$ and where the last step follows from (14a) after pre- and post-multiplying by the matrix $\left[\begin{smallmatrix} P & 0 \\ 0 & U \end{smallmatrix}\right]$, with $U = \left[\begin{smallmatrix} W_M & 0 \\ 0 & W_R \end{smallmatrix}\right]^{-1}$ (recall that, by definition of H, $XP = H$). Since by (13a), $\mathcal{E}(P,1) \supseteq \mathcal{B}(\beta)$, then the bound above on $\dot{V}$ implies that the origin of (27) is locally exponentially stable with region of attraction including $\mathcal{B}(\beta)$. Similar to the proof of item (L) local $\mathcal{L}_2$ stability of system (27) is guaranteed. Moreover, letting $\xi := \left[\begin{smallmatrix} x_{aw} \\ \delta_a w \end{smallmatrix}\right]$, exponential recovery follows from $\dot{V} \leq -2\alpha V$, which holds on the invariant set $\mathcal{E}(P,1)$ and implies that for $\xi(0)$ in this set $V(\xi(t)) \leq e^{-2\alpha t} V(\xi(0))$; denoting by λ_m and λ_M the minimum and maximum eigenvalues of the symmetric matrix $P > 0$, and taking into account that $\lambda_m |\xi|^2 \leq V(\xi) \leq \lambda_M |\xi|^2$ since $V(\xi) = \xi^T P \xi$, the exponential decay of V implies that $|\xi(t)| \leq \sqrt{\frac{\lambda_M}{\lambda_m}} e^{-\alpha t} |\xi(0)|$.

The proof of item (L) is completed by showing that any solution to (13) guarantees feasibility of (14). Since (14b) is always feasible for a large enough k_{max}, it is enough to show that any solution to (13) guarantees feasibility of (14a). In particular, only (13b) will be necessary to this aim. To this aim, it is useful to write (14a) as follows:

$$\mathrm{He}(\Phi_0 + Y[K_x \; K_\delta] Z^T) < 0, \tag{32}$$

where the matrices Φ_0, Y and Z are easily derived from (14a). By the elimination lemma (see, e.g., [7, Sec. 2.6.2]) there exists a $[K_x \; K_\delta]$ satisfying (32) if (and only if):

$$Y_\perp^T \Phi_0 Y_\perp < 0, \qquad Z_\perp^T \Phi_0 Z_\perp < 0, \tag{33}$$

where $Y_\perp$ is an orthogonal complement of Y and $Z_\perp$ is an orthogonal complement of Z. By choosing

$$Y_\perp = \left[\begin{array}{c} I_{n+2m} \\ \hline 0 \quad -I_m \quad 0 \end{array}\right], \quad Z_\perp = \left[\begin{array}{c} 0 \\ \\ I_{2m} \end{array}\right].$$

after some computations (omitted due to space constraints) the second inequality in (33) becomes $\left[\begin{smallmatrix} W_M & 0 \\ 0 & W_R \end{smallmatrix}\right] > 0$, which is always satisfied by assumption, while the first inequality in (33) coincides with (13b). •

Proof of Proposition 2. When $X = 0$ in (13), the reasonings of the proof of item T of Theorem 2 still apply with the extra feature that the sector condition (31) is global (namely it holds for all $\left[\begin{smallmatrix} x_{aw} \\ \delta_{aw} \end{smallmatrix}\right]$). Hence, the results of the previous item hold globally. •

Acknowledgement. The authors would like to thank Andy Teel for his suggestions with the proof of Lemma 2.

7 Conclusions

In this paper we proposed two architectures to solve the model recovery anti-windup problem for nonlinear control systems with linear plants subject to magnitude and rate saturation. For each architecture, three solutions have been given, optimizing a certain $\mathcal{L}_2$ performance metric. Each one of the two architectures is applicable with any type of plant, and one of the three proposed solutions gives global guarantees for exponentially stable plants. The proposed approaches have been comparatively illustrated on a simulation example.

References

[1] C. Barbu, S. Galeani, A.R. Teel, and L. Zaccarian. Nonlinear anti-windup for manual flight control. *Int. J. of Control*, 78(14):1111–1129, September 2005.

[2] C. Barbu, R. Reginatto, A.R. Teel, and L. Zaccarian. Anti-windup for exponentially unstable linear systems with inputs limited in magnitude and rate. In *American Control Conference*, pages 1230–1234, Chicago (IL), USA, June 2000.

[3] A. Bateman and Z. Lin. An analysis and design method for discrete-time linear systems under nested saturation. *IEEE Trans. Aut. Cont.*, 47:1305–1310, 2002.

[4] A. Bateman and Z. Lin. An analysis and design method for linear systems under nested saturation. *Systems and Control Letters*, 48:41–52, 2003.

[5] A. Bemporad, A. Casavola, and E. Mosca. Nonlinear control of constrained linear systems via predictive reference management. *IEEE Trans. Aut. Cont.*, 42(3):340–349, 1997.

[6] J.-M. Biannic and S. Tarbouriech. Optimization and implementation of dynamic anti-windup compensators with multiple saturations in flight control systems. *Control Engineering Practice*, 17(6):703–713, 2009.

[7] S. Boyd, L. El Ghaoui, E. Feron, and V. Balakrishnan. *Linear Matrix Inequalities in System and Control Theory*. Society for Industrial an Applied Mathematics, 1994.

[8] J.M. Gomes da Silva Jr and S. Tarbouriech. Anti-windup design with guaranteed regions of stability: an LMI-based approach. *IEEE Trans. Aut. Cont.*, 50(1):106–111, 2005.

[9] F. Forni, S. Galeani, and L. Zaccarian. Model recovery anti-windup for plants with rate and magnitude saturation. In *European Control Conference*, pages 324–329, Budapest (Hungary), August 2009.

[10] F. Forni, S. Galeani, and L. Zaccarian. An almost anti-windup scheme for plants with magnitude, rate and curvature saturation. In *American Control Conference*, pages 6769–6774, Baltimore (MD), USA, June 2010.

[11] P. Gahinet, A. Nemirovski, A.J. Laub, and M. Chilali. *LMI Control Toolbox*. The MathWorks Inc., 1995.

[12] S. Galeani, S. Onori, A.R. Teel, and L. Zaccarian. A magnitude and rate saturation model and its use in the solution of a static anti-windup problem. *Systems and Control Letters*, 57(1):1–9, 2008.

[13] S. Galeani, S. Tarbouriech, M.C. Turner, and L. Zaccarian. A tutorial on modern anti-windup design. *European Journal of Control*, 15(3-4):418–440, 2009.

[14] E.G. Gilbert and I. Kolmanovsky. Fast reference governors for systems with state and control constraints and disturbance inputs. *Int. J. of Robust and Nonlinear Control*, 9(15):1117–1141, 1999.

[15] L. Giovanini. Model predictive control with amplitude and rate actuator saturation. *ISA Transactions*, 42(2):227–240, 2003.

[16] Jr. Gomes da Silva, J.M., S. Tarbouriech, and G. Garcia. Local stabilization of linear systems under amplitude and rate saturating actuators. *IEEE Trans. Aut. Cont.*, 48(5):842–847, May 2003.

[17] R. Hanus. Antiwindup and bumpless transfer: a survey. In *IMACS World Congress*, pages 59–65, Paris, France, 1988.

[18] A. Hassibi, J. How, and S. Boyd. A path-following method for solving bmi problems in control. In *American Control Conference*, pages 1385–1389, 1999.

[19] T. Hu, Z. Lin, and B.M. Chen. An analysis and design method for linear systems subject to actuator saturation and disturbance. *Automatica*, 38(2):351–359, 2002.

[20] F. Jabbari and İ.E. Kosë. Rate and magnitude-bounded actuators: scheduled output feedback design. *Int. J. of Robust and Nonlinear Control*, 14:1169–1184, 2004.

[21] V. Kapila and W.M. Haddad. Fixed structure controller design for systems with actuator amplitude and rate non-linearities. *Int. J. Contr.*, 73:520–530, 2000.

[22] H.K. Khalil. *Nonlinear Systems*. Prentice Hall, USA, 3rd edition, 2002.

[23] Michal Kocvara and Michael Stingl. PENNON - a code for convex nonlinear and semidefinite programming. *Optimization Methods and Software*, 8(3):317–333, 2003.

[24] M.V. Kothare, P.J. Campo, M. Morari, and N. Nett. A unified framework for the study of anti-windup designs. *Automatica*, 30(12):1869–1883, 1994.

[25] Z. Lin, A.A. Stoorvogel, and A. Saberi. Output regulation for linear systems subject to input saturation. *Automatica*, 32(1):29 – 47, 1996.

[26] Sheng Liu and Li-Ming Zhou. Static anti-windup synthesis for a class of linear systems subject to actuator amplitude and rate saturation. *Acta Automatica Sinica*, 35(7):1003 – 1006, 2009.

[27] J. Lofberg. YALMIP : A toolbox for modeling and optimization in MATLAB. In *IEEE International Symposium on Computer Aided Control Systems Design*, pages 284 –289, Taipei, Taiwan, 2004.

[28] E. Schuster, M.L. Walker, D.A. Humphreys, and M. Krstic. Plasma vertical stabilization with actuation constraints in the DIII-D tokamak. *Automatica*, 41(7):1173 – 1179, 2005.

[29] CA. Shifrin. Sweden seeks cause of Gripen crash. *Aviation Week and Space Technology*, 139:78–79, 1993.

[30] J. Sofrony, M.C. Turner, and I. Postlethwaite. Anti-windup synthesis for systems with rate-limits using Riccati equations. *Int. J. of Control*, 83:233–245, 2010.

[31] S. Tarbouriech, C. Prieur, and Jr. Gomes da Silva, J.M. Stability analysis and stabilization of systems presenting nested saturations. *IEEE Trans. Aut. Cont.*, 51(8):1364–1371, 2006.

[32] S. Tarbouriech and M. Turner. Anti-windup design: an overview of some recent advances and open problems. *IET Proc. Control Theory & Applications*, 3(1):1–19, 2009.

[33] A.R. Teel. Asymptotic convergence from $\mathcal{L}_p$ stability. *IEEE Trans. Aut. Cont.*, 44(11):2169–2170, November 1999.

[34] A.R. Teel and J.B. Buffington. Anti-windup for an F-16's daisy chain control allocator. In *AIAA GNC Conference*, pages 748–754, New Orleans (LA), USA, August 1997.

[35] A.R. Teel and N. Kapoor. The $\mathcal{L}_2$ anti-windup problem: Its definition and solution. In *European Control Conference*, Brussels, Belgium, July 1997.

[36] DH Tuan, P. Apkarian, and Y. Nakashima. A new Lagrangian dual global optimization algorithm for solving bilinear matrix inequalities. In *American Control Conference*, pages 1385–1389, 1999.

[37] F. Tyan and D.S. Bernstein. Dynamics output feedback compensation for linear systems with independent amplitude and rate saturations. *Int. J. of Control*, 67:89–116, 1997.

[38] N. Wada and M. Saeki. Synthesis of a static anti-windup compensator for systems with magnitude and rate limited actuators. In *RoConD Symposium*, pages 131–136, Prague (Czeck Republic), 2000.

[39] Jin-Zhi Wang, C. W. Chan, and Ji-Feng Zhang. Global stability of systems with amplitude and rate saturation compensation. *Int. J. of Robust and Nonlinear Control*, 15-4:155–170, 2005.

[40] F. Wu and M. Soto. Extended anti-windup control schemes for LTI and LFT systems with actuator saturations. *Int. J. of Robust and Nonlinear Control*, 14:1255–1281, 2004.

[41] L. Zaccarian. *Uniting local and global controllers for anti-windup synthesis*. PhD thesis, Università di Roma Tor Vergata, 2000.

[42] L. Zaccarian. Dynamic allocation for input-redundant control systems. *Automatica*, 45:1431–1438, 2009.

[43] L. Zaccarian and A.R. Teel. A common framework for anti-windup, bumpless transfer and reliable designs. *Automatica*, 38(10):1735–1744, 2002.

[44] L. Zaccarian and A.R. Teel. *Modern anti-windup synthesis: control augmentation for actuator saturation*. Princeton University Press, Princeton (NJ), 2011.